Andy Beshear
GOVERNOR

TRANSPORTATION CABINET
200 Mero Street
Frankfort, Kentucky 40601

Jim Gray
SECRETARY

December 9, 2025

CALL NO. 311
CONTRACT ID NO. 251012
ADDENDUM # 2

Subject: McCracken County, FD06 073 NEW ROUTE
Letting December 11, 2025

(1) Revised - Notes - Page 4 of 267
(2) Revised – Proposal Bid Items – Pages 264-267 of 267
(3) Revised – Plan Sheet R2B, R2E, R2F, R2I, R21, R22
Drawing No 28912 - S1, S2
Drawing No 28917 – S2

Proposal revisions are available at http://transportation.ky.gov/Construction-Procurement/.

If you have any questions, please contact us at 502-564-3500.

Sincerely,

Rachel Mills

Rachel Mills, P.E.
Director
Division of Construction Procurement

RM:mr
Enclosures

ADMINISTRATIVE DISTRICT - 01

CONTRACT ID - 251012

FD06 073 NEW ROUTE

COUNTY - MCCRACKEN

PCN - DE0730NEW2512
FD06 073 NEW ROUTE

NEW ROUTE NEW ACCESS ROAD FROM KY-305 NEAR KY-998 EXTENDING WEST TO THE OHIO RIVER MEGAPARK, A DISTANCE OF 01.18 MILES.ASPHALT SURFACE WITH GRADE & DRAIN SYP NO. 01-08702.00.

GEOGRAPHIC COORDINATES LATITUDE 37:05:55.00 LONGITUDE 88:43:15.00

ADT

COMPLETION DATE(S):

COMPLETED BY 06/30/2027 APPLIES TO ENTIRE CONTRACT

251012

PROPOSAL BID ITEMS

Report Date 12/9/25

251012

Section: 0001 - PAVING

LINE	BID CODE	ALT	DESCRIPTION	QUANTITY	UNIT	UNIT PRIC	FP	AMOUNT
0010	00003		CRUSHED STONE BASE (REVISED 12-9-25)	13,863.00	TON		$	
0020	00008		CEMENT STABILIZED ROADBED (REVISED 12-9-25)	18,877.00	SQYD		$	
0030	00100		ASPHALT SEAL AGGREGATE	113.00	TON		$	
0040	00103		ASPHALT SEAL COAT	13.00	TON		$	
0050	00190		LEVELING & WEDGING PG64-22	602.00	TON		$	
0060	00212		CL2 ASPH BASE 1.00D PG64-22	931.00	TON		$	
0070	00214		CL3 ASPH BASE 1.00D PG64-22	4,836.00	TON		$	
0080	00301		CL2 ASPH SURF 0.38D PG64-22	483.00	TON		$	
0090	00312		CL3 ASPH SURF 0.50D PG64-22	1,468.00	TON		$	
0100	00356		ASPHALT MATERIAL FOR TACK	16.00	TON		$	
0105	00358		ASPHALT CURING SEAL (ADDED 12-5-25)	18.90	TON		$	
0110	02084		JPC PAVEMENT-8 IN	3,255.00	SQYD		$	
0120	02542		CEMENT	415.00	TON		$	
0130	02676		MOBILIZATION FOR MILL & TEXT	1.00	LS		$	
0140	02677		ASPHALT PAVE MILLING & TEXTURING	10.00	TON		$	
0145	02702		SAND FOR BLOTTER (ADDED 12-5-25)	47.20	TON		$	
0150	20071EC		JOINT ADHESIVE	13,981.00	LF		$	
0160	21289ED		LONGITUDINAL EDGE KEY	2,060.00	LF		$	
0170	24969ED		LONGITUDINAL SAW CUT	2,430.00	LF		$	

Section: 0002 - ROADWAY

LINE	BID CODE	ALT	DESCRIPTION	QUANTITY	UNIT	UNIT PRIC	FP	AMOUNT
0180	00021		DRAINAGE BLANKET-EMBANKMENT	3,100.00	CUYD		$	
0190	00078		CRUSHED AGGREGATE SIZE NO 2	4.00	TON		$	
0200	00080		CRUSHED AGGREGATE SIZE NO 23	1,900.00	TON		$	
0210	01000		PERFORATED PIPE-4 IN	273.00	LF		$	
0220	01010		NON-PERFORATED PIPE-4 IN	40.00	LF		$	
0230	01015		INSPECT & CERTIFY EDGE DRAIN SYSTEM	1.00	LS		$	
0240	01028		PERF PIPE HEADWALL TY 3-4 IN	4.00	EACH		$	
0250	01691		FLUME INLET TYPE 2	9.00	EACH		$	
0260	01987		DELINEATOR FOR GUARDRAIL BI DIRECTIONAL WHITE	92.00	EACH		$	
0270	02159		TEMP DITCH	4,243.00	LF		$	
0280	02160		CLEAN TEMP DITCH	2,122.00	LF		$	
0290	02230		EMBANKMENT IN PLACE	351,990.00	CUYD		$	
0300	02242		WATER	50.00	MGAL		$	
0310	02351		GUARDRAIL-STEEL W BEAM-S FACE	4,200.00	LF		$	
0320	02360		GUARDRAIL TERMINAL SECTION NO 1	1.00	EACH		$	
0330	02367		GUARDRAIL END TREATMENT TYPE 1	3.00	EACH		$	
0340	02369		GUARDRAIL END TREATMENT TYPE 2A	4.00	EACH		$	

251012

PROPOSAL BID ITEMS

Report Date 12/9/25

LINE	BID CODE	ALT	DESCRIPTION	QUANTITY	UNIT	UNIT PRIC	FP	AMOUNT
0350	02429		RIGHT-OF-WAY MONUMENT TYPE 1	58.00	EACH		$	
0360	02432		WITNESS POST	58.00	EACH		$	
0370	02483		CHANNEL LINING CLASS II	185.00	TON		$	
0380	02484		CHANNEL LINING CLASS III	683.00	TON		$	
0390	02545		CLEARING AND GRUBBING 14 ACRES	1.00	LS		$	
0400	02562		TEMPORARY SIGNS	500.00	SQFT		$	
0410	02585		EDGE KEY	61.00	LF		$	
0420	02602		FABRIC-GEOTEXTILE CLASS 1	18,750.00	SQYD		$	
0430	02603		FABRIC-GEOTEXTILE CLASS 2	3,570.00	SQYD		$	
0440	02650		MAINTAIN & CONTROL TRAFFIC	1.00	LS		$	
0450	02671		PORTABLE CHANGEABLE MESSAGE SIGN	2.00	EACH		$	
0460	02697		EDGELINE RUMBLE STRIPS	2,062.00	LF		$	
0470	02701		TEMP SILT FENCE	4,243.00	LF		$	
0480	02703		SILT TRAP TYPE A	9.00	EACH		$	
0490	02704		SILT TRAP TYPE B	9.00	EACH		$	
0500	02705		SILT TRAP TYPE C	9.00	EACH		$	
0510	02706		CLEAN SILT TRAP TYPE A	9.00	EACH		$	
0520	02707		CLEAN SILT TRAP TYPE B	9.00	EACH		$	
0530	02708		CLEAN SILT TRAP TYPE C	9.00	EACH		$	
0540	02726		STAKING	1.00	LS		$	
0550	02774		PREFABRICATED WICK DRAIN	85,200.00	LF		$	
0560	04933		TEMP SIGNAL 2 PHASE	3.00	EACH		$	
0570	05950		EROSION CONTROL BLANKET	11,641.00	SQYD		$	
0580	05952		TEMP MULCH	83,345.00	SQYD		$	
0590	05953		TEMP SEEDING AND PROTECTION	62,509.00	SQYD		$	
0600	05963		INITIAL FERTILIZER	3.00	TON		$	
0610	05964		MAINTENANCE FERTILIZER	4.00	TON		$	
0620	05985		SEEDING AND PROTECTION	64,393.00	SQYD		$	
0630	05992		AGRICULTURAL LIMESTONE	78.00	TON		$	
0640	06403		FLEXIBLE DELINEATOR POST-B/W	75.00	EACH		$	
0650	06542		PAVE STRIPING-THERMO-6 IN W	21,165.00	LF		$	
0660	06543		PAVE STRIPING-THERMO-6 IN Y	12,717.00	LF		$	
0670	06546		PAVE STRIPING-THERMO-12 IN W	250.00	LF		$	
0680	06549		PAVE STRIPING-TEMP REM TAPE-B	2,400.00	LF		$	
0690	06550		PAVE STRIPING-TEMP REM TAPE-W	2,400.00	LF		$	
0700	06551		PAVE STRIPING-TEMP REM TAPE-Y	2,400.00	LF		$	
0710	06556		PAVE STRIPING-DUR TY 1-6 IN W	624.00	LF		$	
0720	06557		PAVE STRIPING-DUR TY 1-6 IN Y	624.00	LF		$	
0730	06568		PAVE MARKING-THERMO STOP BAR-24IN	24.00	LF		$	
0740	06574		PAVE MARKING-THERMO CURV ARROW	9.00	EACH		$	
0750	06576		PAVE MARKING-THERMO ONLY	2.00	EACH		$	
0760	06610		INLAID PAVEMENT MARKER-MW	25.00	EACH		$	
0770	06612		INLAID PAVEMENT MARKER-BY	109.00	EACH		$	
0780	10020NS		FUEL ADJUSTMENT	81,694.00	DOLL	$1.00	$	$81,694.00
0790	10030NS		ASPHALT ADJUSTMENT	32,536.00	DOLL	$1.00	$	$32,536.00
0800	20191ED		OBJECT MARKER TY 3	3.00	EACH		$	
0810	20458ES403		CENTERLINE RUMBLE STRIPS	1,030.00	LF		$	
0820	22883EN		CONCRETE WEDGE CURB	2,870.00	LF		$	
0830	24679ED		PAVE MARK THERMO CHEVRON	662.00	SQFT		$	

251012

PROPOSAL BID ITEMS

Report Date 12/9/25

LINE	BID CODE	ALT	DESCRIPTION	QUANTITY	UNIT	UNIT PRIC	FP	AMOUNT
0840	25079ED		THRIE BEAM GUARDRAIL TRANSITION TL-2	4.00	EACH		$	
0850	26248EC		ELECTRONIC DELIVERY MGMT SYSTEM - AGG	1.00	LS		$	

Section: 0003 - DRAINAGE

LINE	BID CODE	ALT	DESCRIPTION	QUANTITY	UNIT	UNIT PRIC	FP	AMOUNT
0860	00440		ENTRANCE PIPE-15 IN	304.00	LF		$	
0870	00441		ENTRANCE PIPE-18 IN	88.00	LF		$	
0880	00462		CULVERT PIPE-18 IN	317.00	LF		$	
0890	00464		CULVERT PIPE-24 IN	53.00	LF		$	
0900	00466		CULVERT PIPE-30 IN	188.00	LF		$	
0910	01210		PIPE CULVERT HEADWALL-30 IN	2.00	EACH		$	
0920	01433		SLOPED BOX OUTLET TYPE 1-18 IN	9.00	EACH		$	
0930	01434		SLOPED BOX OUTLET TYPE 1-24 IN	2.00	EACH		$	
0940	01450		S & F BOX INLET-OUTLET-18 IN	1.00	EACH		$	
0950	01650		JUNCTION BOX	1.00	EACH		$	
0960	02607		FABRIC-GEOTEXTILE CLASS 2 FOR PIPE	2,407.00	SQYD	$2.00	$	$4,814.00
0970	24026EC		PIPE CULVERT HEADWALL-54 IN	2.00	EACH		$	
0980	24668EC		STEEL ENCASEMENT PIPE SIZE	309.00	LF		$	

Section: 0004 - BRIDGE- ILLINOIS CENTRAL R/R BRIDGE

LINE	BID CODE	ALT	DESCRIPTION	QUANTITY	UNIT	UNIT PRIC	FP	AMOUNT
0985	02223		GRANULAR EMBANKMENT (ADDED 12-9-25)	465.00	CUYD		$	
0990	02231		STRUCTURE GRANULAR BACKFILL	251.00	CUYD		$	
1000	02692		SETTLEMENT PLATFORM	2.00	EACH		$	
1010	03299		ARMORED EDGE FOR CONCRETE	264.00	LF		$	
1020	03340		STEEL PIPE-2 1/2 IN	84.00	LF		$	
1030	03343		STEEL PIPE-4 IN	84.00	LF		$	
1040	08003		FOUNDATION PREPARATION	1.00	LS		$	
1050	08020		CRUSHED AGGREGATE SLOPE PROT	463.00	TON		$	
1060	08033		TEST PILES	340.00	LF		$	
1070	08051		PILES-STEEL HP14X89	5,572.00	LF		$	
1080	08100		CONCRETE-CLASS A	277.00	CUYD		$	
1090	08104		CONCRETE-CLASS AA	433.00	CUYD		$	
1100	08150		STEEL REINFORCEMENT	55,360.00	LB		$	
1110	08151		STEEL REINFORCEMENT-EPOXY COATED	125,420.00	LB		$	
1120	08500		APPROACH SLAB	200.00	SQYD		$	
1130	08636		PRECAST PC I BEAM TYPE 5	1,407.00	LF		$	
1140	23378EC		CONCRETE SEALING	27,350.00	SQFT		$	
1150	23964EC		PROTECTIVE FENCE	540.00	LF		$	
1160	25028ED		RAIL SYSTEM SINGLE SLOPE - 40 IN	572.00	LF		$	
1170	26233EC		MOBILIZATION FOR CONCRETE SURF TREATMENT	1.00	LS		$	

251012

PROPOSAL BID ITEMS

Report Date 12/9/25

Section: 0005 - BRIDGE- CULVERT 14' X 8' RCBC STA. 113+49.29

LINE	BID CODE	ALT	DESCRIPTION	QUANTITY	UNIT	UNIT PRIC	FP	AMOUNT
1180	08003		FOUNDATION PREPARATION	1.00	LS		$	
1190	08100		CONCRETE-CLASS A	211.00	CUYD		$	
1200	08150		STEEL REINFORCEMENT	32,487.00	LB		$	

Section: 0006 - MOBILIZATION AND/OR DEMOBILIZATION

LINE	BID CODE	ALT	DESCRIPTION	QUANTITY	UNIT	UNIT PRIC	FP	AMOUNT
1210	02568		MOBILIZATION	1.00	LS		$	
1220	02569		DEMOBILIZATION	1.00	LS		$	

TYPICAL SECTIONS
CONCRETE INTERSECTION

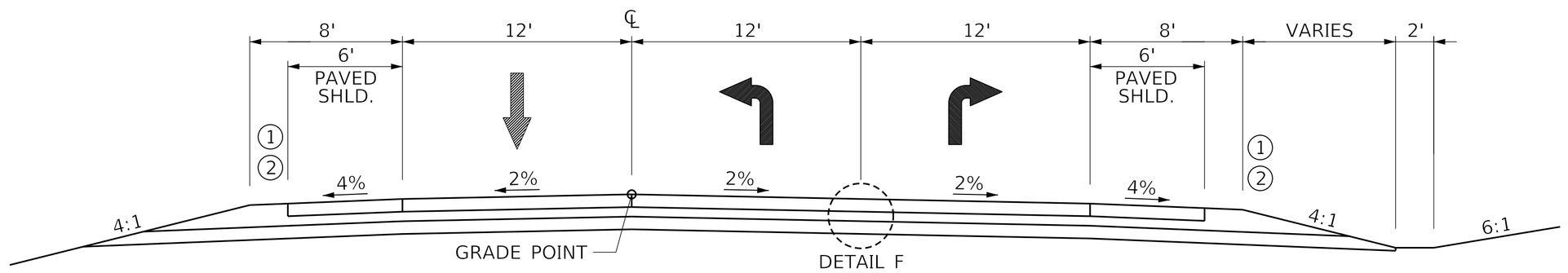

BOBO ROAD – NORMAL SECTION
STA. 153+98.00 TO STA. 155+79.93

BOBO ROAD DRIVING LANE AND OUTSIDE SHOULDER

8.00" SURFACE	*8.00" JPC PAVEMENT*
14.00" BASE	*6.00" CRUSHED STONE BASE* *8.00" CHEMICAL STABILIZATION*
ASPHALT SEAL COAT (2 APPLICATIONS)	*2.4 LBS/SY ASPHALT SEAL COAT (EACH COURSE)* *20 LBS/SY ASPHALT SEAL AGGREGATE (EACH COURSE)*

KY 358 DRIVING LANE AND OUTSIDE SHOULDER

8.00" SURFACE	*8.00" JPC PAVEMENT*
8.00" BASE	*8.00" CRUSHED STONE BASE*
ASPHALT SEAL COAT (2 APPLICATIONS)	*2.4 LBS/SY ASPHALT SEAL COAT (EACH COURSE)* *20 LBS/SY ASPHALT SEAL AGGREGATE (EACH COURSE)*

① SEE CROSS SECTIONS FOR SLOPES OUTSIDE THE SHOULDER LIMITS.

② CONSTRUCT 2 COURSES OF ASPHALT SEAL COAT AND AGGREGATE FROM OUTSIDE EDGE OF PAVED SHOULDER TO A POINT 2' DOWN THE DITCH OR FILL SLOPE.

③ LONGITUDINAL SAW CUT WILL BE REQUIRED TO CONSTRUCT PART WIDTH DURING MAINTENANCE OF TRAFFIC

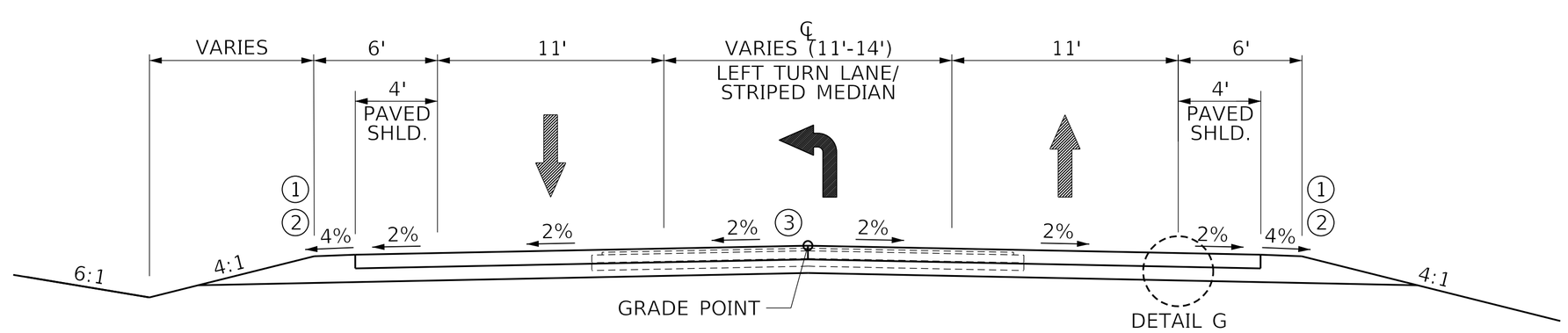

KY 358 – NORMAL SECTION
STA. 210+91.00 TO STA. 214+61.00

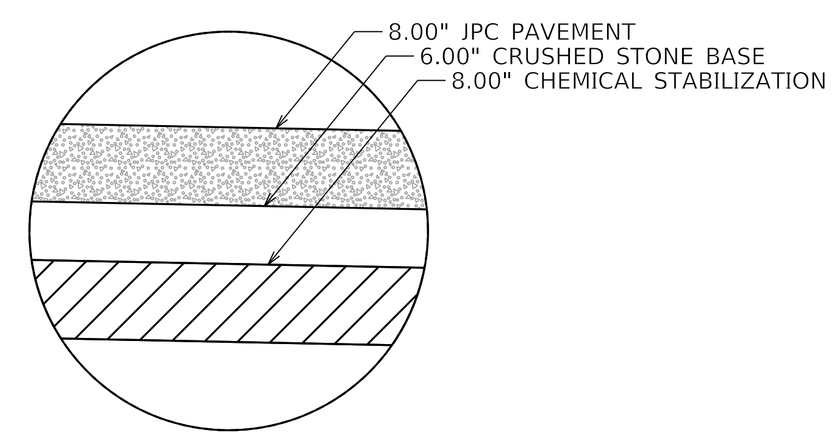

DETAIL F

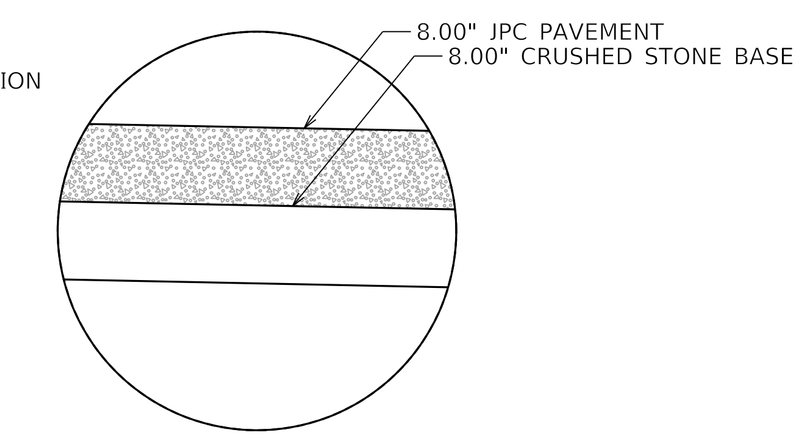

DETAIL G

COMMONWEALTH OF KENTUCKY
DEPARTMENT OF HIGHWAYS
TEAM KENTUCKY TRANSPORTATION CABINET

DRAWING TITLE: TYPICAL SECTIONS

ITEM NO.	COUNTY OF
1-8702.00	MCCRACKEN
SHEET NO.	
R2B	

TYPICAL SECTIONS
CONCRETE INTERSECTION

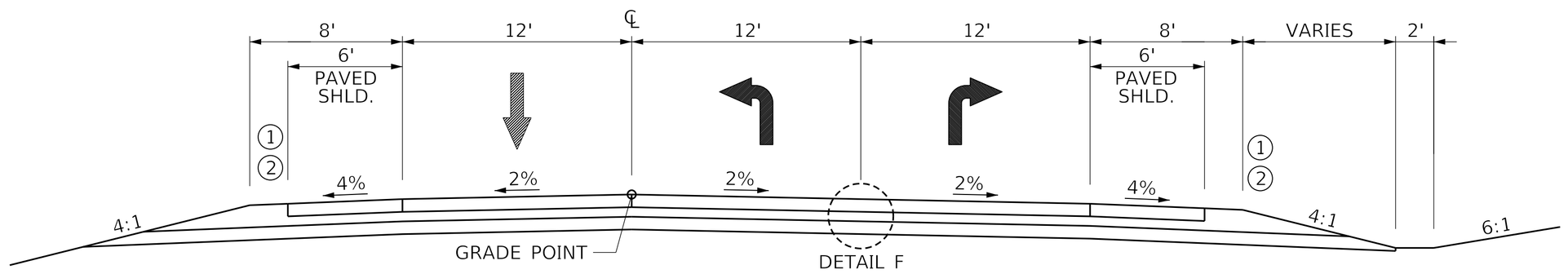

BOBO ROAD – NORMAL SECTION
STA. 153+98.00 TO STA. 155+79.93

BOBO ROAD DRIVING LANE AND OUTSIDE SHOULDER

8.00" SURFACE	*8.00" JPC PAVEMENT*
14.00" BASE	*6.00" CRUSHED STONE BASE* *8.00" CHEMICAL STABILIZATION*
ASPHALT SEAL COAT (2 APPLICATIONS)	*2.4 LBS/SY ASPHALT SEAL COAT (EACH COURSE)* *20 LBS/SY ASPHALT SEAL AGGREGATE (EACH COURSE)*

KY 358 DRIVING LANE AND OUTSIDE SHOULDER

8.00" SURFACE	*8.00" JPC PAVEMENT*
8.00" BASE	*8.00" CRUSHED STONE BASE*
ASPHALT SEAL COAT (2 APPLICATIONS)	*2.4 LBS/SY ASPHALT SEAL COAT (EACH COURSE)* *20 LBS/SY ASPHALT SEAL AGGREGATE (EACH COURSE)*

① SEE CROSS SECTIONS FOR SLOPES OUTSIDE THE SHOULDER LIMITS.

② CONSTRUCT 2 COURSES OF ASPHALT SEAL COAT AND AGGREGATE FROM OUTSIDE EDGE OF PAVED SHOULDER TO A POINT 2' DOWN THE DITCH OR FILL SLOPE.

③ LONGITUDINAL SAW CUT WILL BE REQUIRED TO CONSTRUCT PART WIDTH DURING MAINTENANCE OF TRAFFIC

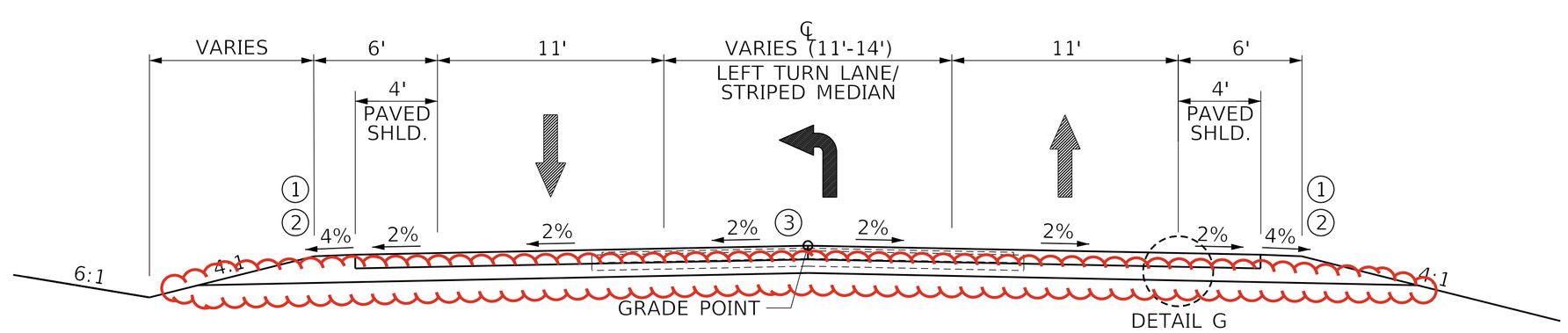

KY 358 – NORMAL SECTION
STA. 210+91.00 TO STA. 214+61.00

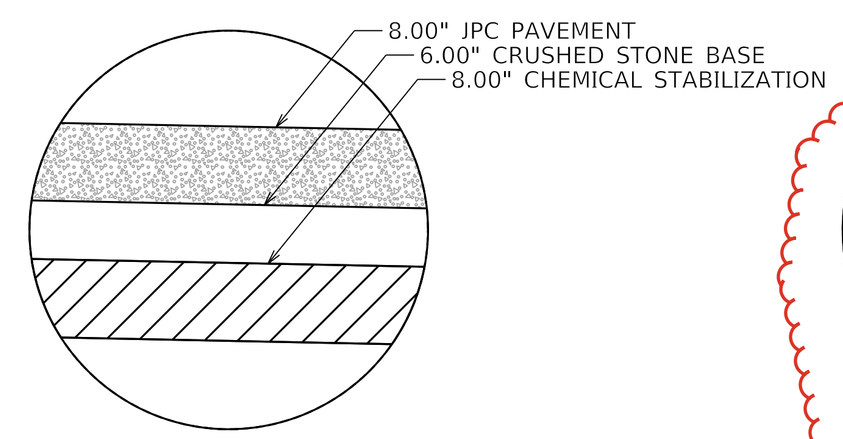

DETAIL F

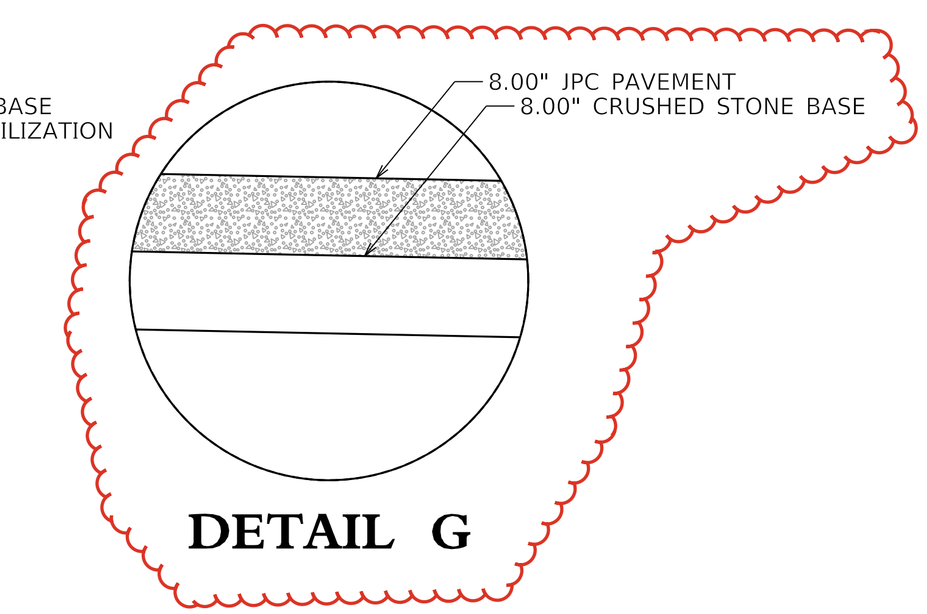

DETAIL G

COMMONWEALTH OF KENTUCKY
DEPARTMENT OF HIGHWAYS
TEAM KENTUCKY TRANSPORTATION CABINET

DRAWING TITLE: TYPICAL SECTIONS

ITEM NO.	COUNTY OF
1-8702.00	MCCRACKEN
SHEET NO.	
R2B	

ITEM	DESCRIPTION	NOTES	UNIT	BOBO ROAD	KY 358	PROJECT TOTALS
00021	DRAINAGE BLANKET, EMBANKMENT		CU YD	3,100		3,100
00078	CRUSHED AGGREGATE SIZE NO 2	4	TON	2	2	4
00080	CRUSHED AGGREGATE SIZE NO 23		TON	1,900		1,900
01000	PERFORATED PIPE-4 IN	4	LF	30	243	273
01010	NON-PERFORATED PIPE-4 IN	4	LF	20	20	40
01015	INSPECT & CERTIFY EDGE DRAIN SYSTEM	4	LS	1		1
01028	PERFORATED PIPE HEADWALL TY 3-4 IN	4	EACH	2	2	4
01691	FLUME INLET TYPE 2		EACH	9		9
01987	DELINEATOR FOR GUARDRAIL B/W		EACH	92		92
02159	TEMP DITCH	7	LF	4,243		4,243
02160	CLEAN TEMP DITCH	7	LF	2,122		2,122
02230	EMBANKMENT IN PLACE	3	CU YD	351,462	528	351,990
02242	WATER	2,6	MGAL	50		50
02351	GUARDRAIL-STEEL W BEAM-S FACE		LF	4,200		4,200
02360	GUARDRAIL TERMINAL SECTION NO 1		EACH	1		1
02367	GUARDRAIL END TREATMENT TYPE 1		EACH	3		3
02369	GUARDRAIL END TREATMENT TYPE 2A		EACH	4		4
02429	RIGHT-OF-WAY MONUMENT TYPE 1		EACH	58		58
02432	WITNESS POST		EACH	58		58
02483	CHANNEL LINING CLASS II	8	TON	178	7	185
02484	CHANNEL LINING CLASS III	8	TON	683		683
02545	CLEARING AND GRUBBING	1	LS	1		1
02562	TEMPORARY SIGNS	6	SQ FT	500		500
02568	MOBILIZATION		LS	1		1
02569	DEMOBILIZATION		LS	1		1
02585	EDGE KEY		LF	18	43	61
02602	FABRIC-GEOTEXTILE CLASS 1		SQ YD	18,750		18,750
02603	FABRIC-GEOTEXTILE CLASS 2	9	SQYD	3,559	11	3,570
02650	MAINTAIN & CONTROL TRAFFIC	6	LS	1		1
02671	PORTABLE CHANGEABLE MESSAGE SIGNS	6,10	EACH	2		2
02701	TEMP SILT FENCE		LF	4,243		4,243
02697	EDGELINE RUMBLE STRIPS		LF		2,062	2,062
02703	SILT TRAP TYPE A	7	EACH	9		9
02704	SILT TRAP TYPE B	7	EACH	9		9
02705	SILT TRAP TYPE C	7	EACH	9		9
02706	CLEAN SILT TRAP TYPE A	7	EACH	9		9
02707	CLEAN SILT TRAP TYPE B	7	EACH	9		9
02708	CLEAN SILT TRAP TYPE C	7	EACH	9		9
02726	STAKING		LS	1		1
02774	PREFABRICATED WICK DRAINS		LF	85,200		85,200
04933	TEMP SIGNAL 2 PHASE	6,10	EACH	3		3
05950	EROSION CONTROL BLANKET		SQ YD	11,641		11,641
05952	TEMP MULCH	7	SQ YD	83,345		83,345
05953	TEMP SEEDING AND PROTECTION	7	SQ YD	62,509		62,509
05963	INITIAL FERTILIZER		TON	3		3
05964	MAINTENANCE FERTILIZER		TON	4		4
05985	SEEDING AND PROTECTION	7	SQ YD	64,393		64,393
05992	AGRICULTURAL LIMESTONE	7	TON	78		78
06549	PAVE STRIPING-TEMP REM TAPE-B	6	LF	2,400		2,400
06550	PAVE STRIPING-TEMP REM TAPE-W	6	LF	2,400		2,400
06551	PAVE STRIPING-TEMP REM TAPE-Y	6	LF	2,400		2,400
10020NS	FUEL ADJUSTMENT		DOLL	81,694		81,694
10030NS	ASPHALT ADJUSTMENT		DOLL	32,536		32,536
20191ED	OBJECT MARKER TY 3		EACH	3		3
22883EN	CONCRETE WEDGE CURB		LF	2,870		2,870
25079ED	THRIE BEAM GUARDRAIL TRANSITION TL-2		EACH	4		4
20458ES403	CENTERLINE RUMBLE STRIPS		LF		1,030	1,030

ITEM	DESCRIPTION	NOTES	UNIT	BOBO ROAD	KY 358	PROJECT TOTALS

GENERAL SUMMARY

1.) APPROXIMATELY 14 ACRES TOTAL.

2.) FOR CONTROLLING DUST CAUSED BY MAINTAINING TRAFFIC ONLY.

3.) EARTHWORK QUANTITIES

COMMON	6,317
ROCK	N/A
EMBANKMENT BENCHING	N/A
TOTAL EXCAVATION	6,317

EMBANKMENT IN PLACE	351,990
REFILL	N/A
EMBANKMENT BENCHING	N/A
TOTAL EMBANKMENT	351,990

THE CONTRACTOR IS ADVISED THAT THE EARTHWORK FIGURES ABOVE ARE SHOWN FOR INFORMATION PURPOSES ONLY. ASSUMPTIONS FOR SHRINK AND SWELL FACTORS ARE THE RESPONSIBILITY OF THE CONTRACTOR.

4.) INCLUDES QUANTITIES CARRIED OVER FROM THE UNDERDRAIN SUMMARY.

5.) ENTRANCE QUANTITIES CARRIED ON BOBO ROAD OR KY 358.

6.) ALL MAINTENANCE OF TRAFFIC QUANTITIES CARRIED ON BOBO ROAD.

7.) ALL EROSION CONTROL QUANTITIES CARRIED ON BOBO ROAD. INCLUDES QUANITIES CARRIED OVER FROM EROSION CONTROL SUMMARY

8.) INCLUDES QUANITIES CARRIED OVER FROM DITCH CHARTS AND DRAINAGE SUMMARY.

9.) FOR UNDERLINING CHANNEL LINNING AND CRUSHED AGGREGATE SIZE NO. 23.

10.) PAYMENT INCLUDES INTIAL PLACEMENT ONLY. RELOCATION OR REPLACEMENT WILL BE CONSIDERED INCIDENTAL TO "MAINTAIN AND CONTROL TRAFFIC".

ITEM	DESCRIPTION	NOTES	UNIT	BOBO ROAD	KY 358	PROJECT TOTALS
00021	DRAINAGE BLANKET, EMBANKMENT		CU YD	3,100		3,100
00078	CRUSHED AGGREGATE SIZE NO 2	4	TON	2	2	4
00080	CRUSHED AGGREGATE SIZE NO 23		TON	1,900		1,900
01000	PERFORATED PIPE-4 IN	4	LF	30	243	273
01010	NON-PERFORATED PIPE-4 IN	4	LF	20	20	40
01015	INSPECT & CERTIFY EDGE DRAIN SYSTEM	4	LS	1		1
01028	PERFORATED PIPE HEADWALL TY 3-4 IN	4	EACH	2	2	4
01691	FLUME INLET TYPE 2		EACH	9		9
01987	DELINEATOR FOR GUARDRAIL B/W		EACH	92		92
02159	TEMP DITCH	7	LF	4,243		4,243
02160	CLEAN TEMP DITCH	7	LF	2,122		2,122
02230	EMBANKMENT IN PLACE	3	CU YD	351,462	528	351,990
02242	WATER	2,6	MGAL	50		50
02351	GUARDRAIL-STEEL W BEAM-S FACE		LF	4,200		4,200
02360	GUARDRAIL TERMINAL SECTION NO 1		EACH	1		1
02367	GUARDRAIL END TREATMENT TYPE 1		EACH	3		3
02369	GUARDRAIL END TREATMENT TYPE 2A		EACH	4		4
02429	RIGHT-OF-WAY MONUMENT TYPE 1		EACH	58		58
02432	WITNESS POST		EACH	58		58
02483	CHANNEL LINING CLASS II	8	TON	178	7	185
02484	CHANNEL LINING CLASS III	8	TON	683		683
02545	CLEARING AND GRUBBING	1	LS	1		1
02562	TEMPORARY SIGNS	6	SQ FT	500		500
02568	MOBILIZATION		LS	1		1
02569	DEMOBILIZATION		LS	1		1
02585	EDGE KEY		LF	18	43	61
02602	FABRIC-GEOTEXTILE CLASS 1		SQ YD	18,750		18,750
02603	FABRIC-GEOTEXTILE CLASS 2	9	SQYD	3,559	11	3,570
02650	MAINTAIN & CONTROL TRAFFIC	6	LS	1		1
02671	PORTABLE CHANGEABLE MESSAGE SIGNS	6,10	EACH	2		2
02701	TEMP SILT FENCE		LF	4,243		4,243
02697	EDGELINE RUMBLE STRIPS		LF		2,062	2,062
02703	SILT TRAP TYPE A	7	EACH	9		9
02704	SILT TRAP TYPE B	7	EACH	9		9
02705	SILT TRAP TYPE C	7	EACH	9		9
02706	CLEAN SILT TRAP TYPE A	7	EACH	9		9
02707	CLEAN SILT TRAP TYPE B	7	EACH	9		9
02708	CLEAN SILT TRAP TYPE C	7	EACH	9		9
02726	STAKING		LS	1		1
02774	PREFABRICATED WICK DRAINS		LF	85,200		85,200
04833	TEMP SIGNAL 2 PHASE	6,10	EACH	3		3
05950	EROSION CONTROL BLANKET		SQ YD	11,641		11,641
05952	TEMP MULCH	7	SQ YD	83,345		83,345
05953	TEMP SEEDING AND PROTECTION	7	SQ YD	62,509		62,509
05963	INITIAL FERTILIZER		TON	3		3
05964	MAINTENANCE FERTILIZER		TON	4		4
05985	SEEDING AND PROTECTION	7	SQ YD	64,393		64,393
05992	AGRICULTURAL LIMESTONE	7	TON	78		78
06549	PAVE STRIPING-TEMP REM TAPE-B	6	LF	2,400		2,400
06550	PAVE STRIPING-TEMP REM TAPE-W	6	LF	2,400		2,400
06551	PAVE STRIPING-TEMP REM TAPE-Y	6	LF	2,400		2,400
10020NS	FUEL ADJUSTMENT		DOLL	81,694		81,694
10030NS	ASPHALT ADJUSTMENT		DOLL	32,536		32,536
20191ED	OBJECT MARKER TY 3		EACH	3		3
22883EN	CONCRETE WEDGE CURB		LF	2,870		2,870
25079ED	THRIE BEAM GUARDRAIL TRANSITION TL-2		EACH	4		4
20458ES403	CENTERLINE RUMBLE STRIPS		LF		1,030	1,030

ITEM	DESCRIPTION	NOTES	UNIT	BOBO ROAD	KY 358	PROJECT TOTALS

GENERAL SUMMARY

REVISED 11-25-25

1.) APPROXIMATELY 14 ACRES TOTAL.

2.) FOR CONTROLLING DUST CAUSED BY MAINTAINING TRAFFIC ONLY.

3.) EARTHWORK QUANTITIES

COMMON	6,317
ROCK	N/A
EMBANKMENT BENCHING	N/A
TOTAL EXCAVATION	6,317

EMBANKMENT IN PLACE	351,990
REFILL	N/A
EMBANKMENT BENCHING	N/A
TOTAL EMBANKMENT	351,990

THE CONTRACTOR IS ADVISED THAT THE EARTHWORK FIGURES ABOVE ARE SHOWN FOR INFORMATION PURPOSES ONLY. ASSUMPTIONS FOR SHRINK AND SWELL FACTORS ARE THE RESPONSIBILITY OF THE CONTRACTOR.

4.) INCLUDES QUANTITIES CARRIED OVER FROM THE UNDERDRAIN SUMMARY.

5.) ENTRANCE QUANTITIES CARRIED ON BOBO ROAD OR KY 358.

6.) ALL MAINTENANCE OF TRAFFIC QUANTITIES CARRIED ON BOBO ROAD.

7.) ALL EROSION CONTROL QUANTITIES CARRIED ON BOBO ROAD. INCLUDES QUANITIES CARRIED OVER FROM EROSION CONTROL SUMMARY

8.) INCLUDES QUANITIES CARRIED OVER FROM DITCH CHARTS AND DRAINAGE SUMMARY.

9.) FOR UNDERLINING CHANNEL LINNING AND CRUSHED AGGREGATE SIZE NO. 23.

10.) PAYMENT INCLUDES INTIAL PLACEMENT ONLY. RELOCATION OR REPLACEMENT WILL BE CONSIDERED INCIDENTAL TO "MAINTAIN AND CONTROL TRAFFIC".

PAVING AREAS

ITEM	DEPTH (INCHES)	DESCRIPTION	DENSITY LBS/SY - IN	BOBO ROAD	KY 358	ENTRANCES	MOT					PROJECT TOTALS
				SQUARE YARDS								
3	VAR.	CRUSHED STONE BASE (IN CUBIC YARDS)	115	5,030	1364	247	56					6,697
8	8.00	CEMENT STABILIZED ROADBED		18,877								18,877
100	N/A	ASPHALT SEAL AGGREGATE (20LBS / SY)		4,649	1,021							5,670
103	N/A	ASPHALT SEAL COAT (2.4LBS / SY)		4,649	1,021							5,670
190	VAR.	LEVELING & WEDGING PG64-22 (IN CUBIC YARDS)	110		104		200					304
212	3.00	CL2 ASPH BASE 1.00D PG64-22	110	5,644								5,644
214	2.50	CL3 ASPH BASE 1.00D PG64-22	110			1,795						1,795
214	3.00	CL3 ASPH BASE 1.00D PG64-22	110	11,840	1,838							13,678
214	3.00	CL3 ASPH BASE 1.00D PG64-22	110	11,960								11,960
214	3.50	CL3 ASPH BASE 1.00D PG64-22	110		1,866							1,866
301	1.50	CL2 ASPH SURF 0.38D PG64-22	110	5,857								5,857
312	1.50	CL3 ASPH SURF 0.50D PG64-22	110	11,720	4,281	1,795						17,796
358	N/A	ASPHALT CURING SEAL (2 LBS / SY)		18,877								18,877
2702	N/A	SAND FOR BLOTTER (5 LBS / SY)		18,877								18,877
24970EC	N/A	ASPHALT MATERIAL FOR TACK (0.84LBS / SY)		29,417	6,119	1,795						37,340
2084	8.00	JPC PAVEMENT-8 IN		1,273	1,830	152						3,255
2542	8.00	CEMENT	5.5	18,877								18,877
2677	1.50	ASPHALT PAVE MILLING & TEXTURING	110		5							5
20071EC	N/A	JOINT ADHESIVE (IN LINEAR FEET)		12,951	1,030							13,981
21289ED	N/A	LONGITUDINAL EDGE KEY (IN LINEAR FEET)			2,060							2,060
24969ED	N/A	LONGITUDINAL SAW CUT (IN LINEAR FEET)			2,430							2,430

PAVING SUMMARY

ITEM	DESCRIPTION	UNIT	BOBO ROAD	KY 358	ENTRANCES	MOT					PROJECT TOTALS
3	CRUSHED STONE BASE	TON	10,412	2,824	511	116					13,863
8	CEMENT STABILIZED ROADBED	SQ YD	18,877								18,877
100	ASPHALT SEAL AGGREGATE	TON	93	20							113
103	ASPHALT SEAL COAT	TON	11	2							13
190	LEVELING & WEDGING PG64-22	TON		206		396					602
212	CL2 ASPH BASE 1.00D PG64-22	TON	931								931
214	CL3 ASPH BASE 1.00D PG64-22	TON	3,927	662	247						4,836
301	CL2 ASPH SURF 0.38D PG64-22	TON	483								483
312	CL3 ASPH SURF 0.50D PG64-22	TON	967	353	148						1,468
356	ASPHALT MATERIAL FOR TACK	TON	12	3	1						16
358	ASPHALT CURING SEAL	TON	18.9								18.9
2084	JPC PAVEMENT-8 IN	SQYD	1,273	1,830	152						3,255
2542	CEMENT	TON	415								415
2676	MOBILIZATION FOR MILL & TEXT	LS		1							1
2677	ASPHALT PAVE MILLING & TEXTURING	TON		10							10
2702	SAND FOR BLOTTER	TON	47.2								47.2
20071EC	JOINT ADHESIVE	LF	12,951	1,030							13,981
21289ED	LONGITUDINAL EDGE KEY	LF		2,060							2,060
24969ED	LONGITUDINAL SAW CUT	LF		2,430							2,430

COMMONWEALTH OF KENTUCKY
DEPARTMENT OF HIGHWAYS

TEAM KENTUCKY TRANSPORTATION CABINET

DRAWING TITLE: PAVING SUMMARY

ITEM NO. 1-8702.00

COUNTY OF MCCRACKEN

SHEET NO. R2F

OpenRoads Designer v10.16.2.267
USER: dhawkins
FILE NAME: V:\1785\ACTIVE\1785520151\TRANSPORTATION\DESIGN\DRAWING\ELECTRONIC ENGINEERING DATA\PLAN CONSTUCTION\01_8702_PAVING_SUMMARY.DGN

PAVING AREAS

ITEM	DEPTH (INCHES)	DESCRIPTION	DENSITY LBS/SY - IN	BOBO ROAD	KY 358	ENTRANCES	MOT					PROJECT TOTALS
				SQUARE YARDS								
3	VAR.	CRUSHED STONE BASE (IN CUBIC YARDS)	115	5,030	1364	247	56					6,697
8	8.00	CEMENT STABILIZED ROADBED		18,877								18,877
100	N/A	ASPHALT SEAL AGGREGATE (20LBS / SY)		4,649	1,021							5,670
103	N/A	ASPHALT SEAL COAT (2.4LBS / SY)		4,649	1,021							5,670
190	VAR.	LEVELING & WEDGING PG64-22 (IN CUBIC YARDS)	110		104		200					304
212	3.00	CL2 ASPH BASE 1.00D PG64-22	110	5,644								5,644
214	2.50	CL3 ASPH BASE 1.00D PG64-22	110			1,795						1,795
214	3.00	CL3 ASPH BASE 1.00D PG64-22	110	11,840	1,838							13,678
214	3.00	CL3 ASPH BASE 1.00D PG64-22	110	11,960								11,960
214	3.50	CL3 ASPH BASE 1.00D PG64-22	110		1,866							1,866
301	1.50	CL2 ASPH SURF 0.38D PG64-22	110	5,857								5,857
312	1.50	CL3 ASPH SURF 0.50D PG64-22	110	11,720	4,281	1,795						17,796
358	N/A	ASPHALT CURING SEAL (2 LBS / SY)		18,877								18,877
2702	N/A	SAND FOR BLOTTER (5 LBS / SY)		18,877								18,877
24970EC	N/A	ASPHALT MATERIAL FOR TACK (0.84LBS / SY)		29,417	6,119	1,795						37,340
2084	8.00	JPC PAVEMENT-8 IN		1,273	1,830	152						3,255
2542	8.00	CEMENT	5.5	18,877								18,877
2677	1.50	ASPHALT PAVE MILLING & TEXTURING	110		5							5
20071EC	N/A	JOINT ADHESIVE (IN LINEAR FEET)		12,951	1,030							13,981
21289ED	N/A	LONGITUDINAL EDGE KEY (IN LINEAR FEET)			2,060							2,060
24969ED	N/A	LONGITUDINAL SAW CUT (IN LINEAR FEET)			2,430							2,430

PAVING SUMMARY

ITEM	DESCRIPTION	UNIT	BOBO ROAD	KY 358	ENTRANCES	MOT					PROJECT TOTALS
3	CRUSHED STONE BASE	TON	10,412	2,824	511	116					13,863
8	CEMENT STABILIZED ROADBED	SQ YD	18,877								18,877
100	ASPHALT SEAL AGGREGATE	TON	93	20							113
103	ASPHALT SEAL COAT	TON	11	2							13
190	LEVELING & WEDGING PG64-22	TON		206		396					602
212	CL2 ASPH BASE 1.00D PG64-22	TON	931								931
214	CL3 ASPH BASE 1.00D PG64-22	TON	3,927	662	247						4,836
301	CL2 ASPH SURF 0.38D PG64-22	TON	483								483
312	CL3 ASPH SURF 0.50D PG64-22	TON	967	353	148						1,468
356	ASPHALT MATERIAL FOR TACK	TON	12	3	1						16
358	ASPHALT CURING SEAL	TON	18.9								18.9
2084	JPC PAVEMENT-8 IN	SQYD	1,273	1,830	152						3,255
2542	CEMENT	TON	415								415
2676	MOBILIZATION FOR MILL & TEXT	LS		1							1
2677	ASPHALT PAVE MILLING & TEXTURING	TON		10							10
2702	SAND FOR BLOTTER	TON	47.2								47.2
20071EC	JOINT ADHESIVE	LF	12,951	1,030							13,981
21289ED	LONGITUDINAL EDGE KEY	LF		2,060							2,060
24969ED	LONGITUDINAL SAW CUT	LF		2,430							2,430

COMMONWEALTH OF KENTUCKY
DEPARTMENT OF HIGHWAYS

TEAM KENTUCKY TRANSPORTATION CABINET

DRAWING TITLE: PAVING SUMMARY

ITEM NO. 1-8702.00

COUNTY OF MCCRACKEN

SHEET NO. R2F

OpenRoads Designer v10.16.2.267
USER: dhawkins
FILE NAME: V:\1785\ACTIVE\1785520151\TRANSPORTATION\DESIGN\DRAWING\ELECTRONIC ENGINEERING DATA\PLAN CONSTUCTION\01_8702_PAVING_SUMMARY.DGN

GENERAL NOTES

A.) SPECIAL NOTE FOR PORTABLE CHANGEABLE MESSAGE SIGNS
SPECIAL NOTE FOR GUARDRAIL DELIVERY VERIFICATION SHEE
SPECIAL NOTE FOR EXPERIMENTAL KYCT AND HAMBURG TESTING
SPECIAL NOTE FOR ASPHALT MILLING AND TEXTURING
SPECIAL NOTE FOR LONGITUDINAL PAVEMENT JOINT ADHESIVE
SPECIAL NOTE FOR NON-TRACKING TACK
SPECIAL NOTE FOR BARCODES ON PERMANENT SIGNS
SPECIAL NOTE FOR SUBGRADE STABILIZATION ALTERNATES

B.) N.G.S. (U.S.G.S.) BENCH MARKS

DO NOT DISTURB N.G.S. (U.S.G.S.) BENCH MARKS IN ANY MANNER UNLESS DIRECTED BY THE ENGINEER.

C.) BEFORE YOU DIG

THE CONTRACTOR WILL BE RESPONSIBLE FOR CONTACTING ALL UTILITY FACILITY OWNERS ON THE SUBJECT PROJECT TO COORDINATE HIS ACTIVITIES. THE CONTRACTOR WILL COORDINATE HIS ACTIVITIES TO MINIMIZE AND, WHERE POSSIBLE, AVOID CONFLICTS WITH UTILITY FACILITIES. WHERE CONFLICTS WITH UTILITY FACILITIES ARE UNAVOIDABLE, THE CONTRACTOR WILL COORDINATE ANY NECESSARY RELOCATION WORK WITH THE FACILITY OWNER AND RESIDENT ENGINEER.

IT IS THE CONTRACTOR'S RESPONSIBILITY TO VERIFY ALL UTILITIES AND THEIR RESPECTIVE LOCATIONS BEFORE EXCAVATING. THE CONTRACTOR SHALL MAKE EVERY EFFORT TO PROTECT UNDERGROUND FACILITIES FROM DAMAGE AS PRESCRIBED IN THE UNDERGROUND FACILITY DAMAGE PROTECTION ACT OF 1994, KENTUCKY REVISED STATUTE KRS 367.4901 TO 367.4917. IT IS THE CONTRACTOR'S RESPONSIBILITY TO DETERMINE AND TAKE STEPS NECESSARY TO BE IN COMPLIANCE WITH FEDERAL AND STATE DAMAGE PREVENTION DIRECTIVES.

D.) DEPARTMENT OF THE ARMY PERMIT AND WATER QUALITY CERTIFICATION APPROVALS

A DEPARTMENT OF THE ARMY (DA) PERMIT, WHICH MAY REQUIRE APPROVAL OF A STATE WATER QUALITY CERTIFICATION FROM THE KENTUCKY DIVISION OF WATER, REGULATES THIS PROJECT AT ONE OR MORE LOCATIONS. PERFORM ALL APPLICABLE WORK IN COMPLIANCE WITH THE CONDITIONS STATED IN THE DA PERMIT AND THE APPROVED WATER QUALITY CERTIFICATION. POST A COPY OF THE DA PERMIT AND THE WATER QUALITY CERTIFICATION IN A CONSPICUOUS PLACE AT THE PROJECT SITE. IF A DA PERMIT OR WATER QUALITY CERTIFICATION APPROVAL IS PENDING, DO NOT WORK IN OR DISTURB THE DESIGNATED AREA(S) UNTIL OBTAINING THE APPROPRIATE APPROVAL(S). REFER TO NOTICE(S) CONTAINED IN THE CONTRACT BID PROPOSAL FOR DESIGNATED AREA(S) WHERE WORK IS PROHIBITED BY THE ABSENCE OF APPROVAL.

E.) COMPACTION OF ASPHALT MIXTURES

WILL ACCEPT THE COMPACTION OF ASPHALT MIXTURES FURNISHED FOR DRIVING LANES AND RAMPS AT ONE INCH OR GREATER ON THIS PROJECT BY OPTION A ACCORDING TO SUBSECTIONS 402 AND 403 OF THE CURRENT STANDARD SPECIFICATIONS. USE JOINT CORES AS DESCRIBED IN SUBSECTION 402.03.02 FOR SURFACE MIXTURES ONLY. WILL ACCEPT THE COMPACTION OF ALL OTHER ASPHALT MIXTURES BY OPTION B.

F.) STANDARD DRAWINGS

STANDARD DRAWINGS ARE NOT ATTACHED TO THESE PLANS. A STANDARD DRAWING BOOK AND THE HEADWALL SUPPLEMENTAL BOOK MAY BE OBTAINED FROM THE POLICY SUPPORT BRANCH OF THE DEPARTMENT OF ADMINISTRATIVE SERVICES IN FRANKFORT, KY. AT (502) 564-4610

G.) SPECIAL NOTE FOR EXCAVATION AND EMBANKMENT

IN ACCORDANCE WITH CURRENT KYTC SPECIFICATIONS WITHOUT REGARD TO THE MATERIALS ENCOUNTERED, ALL ROADWAY AND DRAINAGE EXCAVATION IS UNCLASSIFIED AND THE DEPARTMENT WILL CONSIDER IT ROADWAY EXCAVATION. ANY REFERENCE TO ROCK, EARTH,OR ANY OTHER MATERIAL ON THE PLANS OR CROSS SECTIONS, WHETHER IN NUMBERS, WORDS, LETTERS, OR LINES, IS SOLELY FOR THE DEPARTMENT'S INFORMATION AND IS NOT AN INDICATION OF CLASSIFIED EXCAVATION OR THE QUANTITY OF EITHER ROCK, EARTH, OR ANY OTHER MATERIAL INVOLVED. THE BIDDER MUST DRAW HIS OWN CONCLUSIONS AS TO THE CONDITIONS TO BE ENCOUNTERED INCLUDING ANY SHRINKAGE AND SWELL OF MATERIALS. THE DEPARTMENT DOES NOT GIVE ANY GUARANTEE AS TO THE ACCURACY OF THE DATA AND WILL NOT CONSIDER ANY CLAIM FOR ADDITIONAL COMPENSATION WHEN THE MATERIALS ENCOUNTERED ARE NOT IN ACCORDANCE WITH THE CLASSIFICATION SHOWN.

H.) SPECIAL NOTE FOR OVERHAUL

OVERHAUL SHALL NOT BE CONSIDERED FOR ANY UNDERCUT, SPECIAL EXCAVATIONS, OR AUTHORIZED ROADWAY EXCAVATION ADJUSTMENTS FOR THIS PROJECT.

I.) ASPHALT PAVEMENT RIDE QUALITY

PAVEMENT RIDEABILITY REQUIREMENTS, IN ACCORDANCE WITH SECTION 410 CATEGORY A OF THE STANDARD SPECIFICATIONS, SHALL APPLY ON THIS PROJECT.

J.) EXISTING / PROPOSED DRAINAGE STRUCTURES

ANY DAMAGE SUSTAINED TO EXISTING OR INSTALLED PROPOSED STRUCTURES WILL BE REPAIRED OR REPLACED AT THE CONTRACTORS EXPENSE.

K.) EDGE KEY

THIS WORK INCLUDES CUTTING OUT THE EXISTING ASPHALT TO A MINIMUM DEPTH AND WIDTH AS DETAILED ELSEWHERE IN THE PLANS SO THAT THE NEW ASPHALT MAY HEEL INTO THE EXISTING ASPHALT. THE CONTRACT UNIT PRICE BID LINEAR FOOT (PER METER) FOR "EDGE KEY" INCLUDES ALL NECESSARY MATERIALS, LABOR AND EQUIPMENT NECESSARY TO PERFORM THE WORK AND DISPOSE OF THE REMOVED ASPHALT MATERIAL.

L.) BRIDGE END HEADER CURB

ALL STANDARD HEADER CURB BETWEEN BRIDGES END AND PROPOSED FLUMES IS INCIDENTAL TO "THRIE BEAM GUARDRAIL TRANSITION TL-2".

M.) SETTLEMENT

SEE ROADWAY AND BRIDGE GEOTECHNICAL REPORTS AND GEOTECHNICAL REPORT ADDENDUM. SIGNIFICANT SETTLEMENT IS EXPECTED IN AREAS OF HIGH EMBANKMENT FOR BOBO ROAD. THE CONTRACTOR WILL INSTALL DRAINAGE BLANKET AND WICK DRAINS AND THEN CEASE WORK IN PROPOSED EMBANKMENT AREAS UNTIL SETTLEMENT REACHES TARGETS OUTLINED IN THE GEOTECHNICAL REPORT. NO EMBANKMENT WORK OR BRIDGE WORK CAN BEGIN UNTIL SETTLEMENT PERIOD HAS ENDED. AS OUTLINED IN THE GEOTECHNICAL REPORT ADDENDUM. IT MAY BE NECESSARY TO PRE-AUGER THE WICK DRAINS. REGARDLESS OF THE INSTALLATION METHOD, ALL PAYMENT FOR WICK DRAIN INSTALLATION SHALL BE UNDER THE "PREFABRICATED WICK DRAINS" BID ITEM.

N.) CHEMICAL STABILIZATION

CEMENT CHEMICAL STABILIZATION HAS BEEN ESTABLISHED FOR THE PROJECT BASED ON SOILS IN THE AREA. CHEMICAL STABILIZATION TYPE DEPENDS ON EMBANKMENT MATERIAL SOIL CLASSIFICATION. CHEMICAL STABILIZATION TYPE MUST BE APPROVED BY THE ENGINEER PRIOR TO WORK BEGINNING. NO ADDITIONAL COMPENSATION WILL BE PROVIDED IF CHEMICAL STABILIZATION TYPE IS CHANGED.

O.) EXCAVATION MATERIAL

ONSITE EXCAVATION MATERIAL IS NOT TO BE USED AS EMBANKMENT MATERIAL UNDER THE LIMITS OF THE PAVED SHOULDERS AND DRIVING LANES OF BOBO ROAD AND KY 358.

REVISED 11-25-25

GENERAL NOTES

A.) SPECIAL NOTE FOR PORTABLE CHANGEABLE MESSAGE SIGNS
SPECIAL NOTE FOR GUARDRAIL DELIVERY VERIFICATION SHEE
SPECIAL NOTE FOR EXPERIMENTAL KYCT AND HAMBURG TESTING
SPECIAL NOTE FOR ASPHALT MILLING AND TEXTURING
SPECIAL NOTE FOR LONGITUDINAL PAVEMENT JOINT ADHESIVE
SPECIAL NOTE FOR NON-TRACKING TACK
SPECIAL NOTE FOR BARCODES ON PERMANENT SIGNS
SPECIAL NOTE FOR SUBGRADE STABILIZATION ALTERNATES

B.) N.G.S. (U.S.G.S.) BENCH MARKS

DO NOT DISTURB N.G.S. (U.S.G.S.) BENCH MARKS IN ANY MANNER UNLESS DIRECTED BY THE ENGINEER.

C.) BEFORE YOU DIG

THE CONTRACTOR WILL BE RESPONSIBLE FOR CONTACTING ALL UTILITY FACILITY OWNERS ON THE SUBJECT PROJECT TO COORDINATE HIS ACTIVITIES. THE CONTRACTOR WILL COORDINATE HIS ACTIVITIES TO MINIMIZE AND, WHERE POSSIBLE, AVOID CONFLICTS WITH UTILITY FACILITIES. WHERE CONFLICTS WITH UTILITY FACILITIES ARE UNAVOIDABLE, THE CONTRACTOR WILL COORDINATE ANY NECESSARY RELOCATION WORK WITH THE FACILITY OWNER AND RESIDENT ENGINEER.

IT IS THE CONTRACTOR'S RESPONSIBILITY TO VERIFY ALL UTILITIES AND THEIR RESPECTIVE LOCATIONS BEFORE EXCAVATING. THE CONTRACTOR SHALL MAKE EVERY EFFORT TO PROTECT UNDERGROUND FACILITIES FROM DAMAGE AS PRESCRIBED IN THE UNDERGROUND FACILITY DAMAGE PROTECTION ACT OF 1994, KENTUCKY REVISED STATUTE KRS 367.4901 TO 367.4917. IT IS THE CONTRACTOR'S RESPONSIBILITY TO DETERMINE AND TAKE STEPS NECESSARY TO BE IN COMPLIANCE WITH FEDERAL AND STATE DAMAGE PREVENTION DIRECTIVES.

D.) DEPARTMENT OF THE ARMY PERMIT AND WATER QUALITY CERTIFICATION APPROVALS

A DEPARTMENT OF THE ARMY (DA) PERMIT, WHICH MAY REQUIRE APPROVAL OF A STATE WATER QUALITY CERTIFICATION FROM THE KENTUCKY DIVISION OF WATER, REGULATES THIS PROJECT AT ONE OR MORE LOCATIONS. PERFORM ALL APPLICABLE WORK IN COMPLIANCE WITH THE CONDITIONS STATED IN THE DA PERMIT AND THE APPROVED WATER QUALITY CERTIFICATION. POST A COPY OF THE DA PERMIT AND THE WATER QUALITY CERTIFICATION IN A CONSPICUOUS PLACE AT THE PROJECT SITE. IF A DA PERMIT OR WATER QUALITY CERTIFICATION APPROVAL IS PENDING, DO NOT WORK IN OR DISTURB THE DESIGNATED AREA(S) UNTIL OBTAINING THE APPROPRIATE APPROVAL(S). REFER TO NOTICE(S) CONTAINED IN THE CONTRACT BID PROPOSAL FOR DESIGNATED AREA(S) WHERE WORK IS PROHIBITED BY THE ABSENCE OF APPROVAL.

E.) COMPACTION OF ASPHALT MIXTURES

WILL ACCEPT THE COMPACTION OF ASPHALT MIXTURES FURNISHED FOR DRIVING LANES AND RAMPS AT ONE INCH OR GREATER ON THIS PROJECT BY OPTION A ACCORDING TO SUBSECTIONS 402 AND 403 OF THE CURRENT STANDARD SPECIFICATIONS. USE JOINT CORES AS DESCRIBED IN SUBSECTION 402.03.02 FOR SURFACE MIXTURES ONLY. WILL ACCEPT THE COMPACTION OF ALL OTHER ASPHALT MIXTURES BY OPTION B.

F.) STANDARD DRAWINGS

STANDARD DRAWINGS ARE NOT ATTACHED TO THESE PLANS. A STANDARD DRAWING BOOK AND THE HEADWALL SUPPLEMENTAL BOOK MAY BE OBTAINED FROM THE POLICY SUPPORT BRANCH OF THE DEPARTMENT OF ADMINISTRATIVE SERVICES IN FRANKFORT, KY. AT (502) 564-4610

G.) SPECIAL NOTE FOR EXCAVATION AND EMBANKMENT

IN ACCORDANCE WITH CURRENT KYTC SPECIFICATIONS WITHOUT REGARD TO THE MATERIALS ENCOUNTERED, ALL ROADWAY AND DRAINAGE EXCAVATION IS UNCLASSIFIED AND THE DEPARTMENT WILL CONSIDER IT ROADWAY EXCAVATION. ANY REFERENCE TO ROCK, EARTH,OR ANY OTHER MATERIAL ON THE PLANS OR CROSS SECTIONS, WHETHER IN NUMBERS, WORDS, LETTERS, OR LINES, IS SOLELY FOR THE DEPARTMENT'S INFORMATION AND IS NOT AN INDICATION OF CLASSIFIED EXCAVATION OR THE QUANTITY OF EITHER ROCK, EARTH, OR ANY OTHER MATERIAL INVOLVED. THE BIDDER MUST DRAW HIS OWN CONCLUSIONS AS TO THE CONDITIONS TO BE ENCOUNTERED INCLUDING ANY SHRINKAGE AND SWELL OF MATERIALS. THE DEPARTMENT DOES NOT GIVE ANY GUARANTEE AS TO THE ACCURACY OF THE DATA AND WILL NOT CONSIDER ANY CLAIM FOR ADDITIONAL COMPENSATION WHEN THE MATERIALS ENCOUNTERED ARE NOT IN ACCORDANCE WITH THE CLASSIFICATION SHOWN.

H.) SPECIAL NOTE FOR OVERHAUL

OVERHAUL SHALL NOT BE CONSIDERED FOR ANY UNDERCUT, SPECIAL EXCAVATIONS, OR AUTHORIZED ROADWAY EXCAVATION ADJUSTMENTS FOR THIS PROJECT.

I.) ASPHALT PAVEMENT RIDE QUALITY

PAVEMENT RIDEABILITY REQUIREMENTS, IN ACCORDANCE WITH SECTION 410 CATEGORY A OF THE STANDARD SPECIFICATIONS, SHALL APPLY ON THIS PROJECT.

J.) EXISTING / PROPOSED DRAINAGE STRUCTURES

ANY DAMAGE SUSTAINED TO EXISTING OR INSTALLED PROPOSED STRUCTURES WILL BE REPAIRED OR REPLACED AT THE CONTRACTORS EXPENSE.

K.) EDGE KEY

THIS WORK INCLUDES CUTTING OUT THE EXISTING ASPHALT TO A MINIMUM DEPTH AND WIDTH AS DETAILED ELSEWHERE IN THE PLANS SO THAT THE NEW ASPHALT MAY HEEL INTO THE EXISTING ASPHALT. THE CONTRACT UNIT PRICE BID LINEAR FOOT (PER METER) FOR "EDGE KEY" INCLUDES ALL NECESSARY MATERIALS, LABOR AND EQUIPMENT NECESSARY TO PERFORM THE WORK AND DISPOSE OF THE REMOVED ASPHALT MATERIAL.

L.) BRIDGE END HEADER CURB

ALL STANDARD HEADER CURB BETWEEN BRIDGES END AND PROPOSED FLUMES IS INCIDENTAL TO "THRIE BEAM GUARDRAIL TRANSITION TL-2".

M.) SETTLEMENT

SEE ROADWAY AND BRIDGE GEOTECHNICAL REPORTS AND GEOTECHNICAL REPORT ADDENDUM. SIGNIFICANT SETTLEMENT IS EXPECTED IN AREAS OF HIGH EMBANKMENT FOR BOBO ROAD. THE CONTRACTOR WILL INSTALL DRAINAGE BLANKET AND WICK DRAINS AND THEN CEASE WORK IN PROPOSED EMBANKMENT AREAS UNTIL SETTLEMENT REACHES TARGETS OUTLINED IN THE GEOTECHNICAL REPORT. NO EMBANKMENT WORK OR BRIDGE WORK CAN BEGIN UNTIL SETTLEMENT PERIOD HAS ENDED. AS OUTLINED IN THE GEOTECHNICAL REPORT ADDENDUM. IT MAY BE NECESSARY TO PRE-AUGER THE WICK DRAINS. REGARDLESS OF THE INSTALLATION METHOD, ALL PAYMENT FOR WICK DRAIN INSTALLATION SHALL BE UNDER THE "PREFABRICATED WICK DRAINS" BID ITEM.

N.) CHEMICAL STABILIZATION

CEMENT CHEMICAL STABILIZATION HAS BEEN ESTABLISHED FOR THE PROJECT BASED ON SOILS IN THE AREA. CHEMICAL STABILIZATION TYPE DEPENDS ON EMBANKMENT MATERIAL SOIL CLASSIFICATION. CHEMICAL STABILIZATION TYPE MUST BE APPROVED BY THE ENGINEER PRIOR TO WORK BEGINNING. NO ADDITIONAL COMPENSATION WILL BE PROVIDED IF CHEMICAL STABILIZATION TYPE IS CHANGED.

O.) EXCAVATION MATERIAL

ONSITE EXCAVATION MATERIAL IS NOT TO BE USED AS EMBANKMENT MATERIAL UNDER THE LIMITS OF THE PAVED SHOULDERS AND DRIVING LANES OF BOBO ROAD AND KY 358.

PHASE 1

→ SEE GEOTECHNICAL REPORTS FOR ROADWAY AND BRIDGE. CONSTRUCT THE DRAINAGE AND EMBANKMENT FOR BOBO ROAD TO A POINT WHERE EXISTING TRAFFIC ON KY 358 IS NOT AFFECTED BY CONSTRUCTION ACTIVITIES. THE CONTRACTOR MUST THEN CEASE WORK IN HIGH EMBANKMENT AREAS AND ALLOW FOR SETTLEMENT OUTLINED IN THE GEOTECHNICAL REPORTS. BRIDGE CONSTRUCTION CAN NOT BEGIN UNTIL SETTLEMENT IS COMPLETED. THE CONTRACTOR IS RESPONSIBLE TO FOLLOW ALL ENVIRONMENTAL GUIDANCE DURING CONSTRUCTION. THE CONTRACTOR IS RESPONSIBLE TO COORDINATE WITH THE RAILROAD WHEN IN THE VICINITY DURING CONSTRUCTION ACTIVITIES.

PHASE 2

→ CLOSE THE EXISTING WEST BOUND LANE OF KY 358. ERECT TEMPORARY SIGNALS, BARRELS, BARRICADES, WARNING SIGNAGE, AND STRIPING CHANGES TO UTILIZE THE EAST BOUND LANE FOR BOTH DIRECTIONS, ONE DIRECTION AT A TIME CONTROLLED BY TEMPORARY SIGNALS. USE TEMPORARY TAPE TO COVER EXISTING CENTERLINE STRIPE THROUGHOUT TAPER AREAS.

→ CONSTRUCT ASPHALT WIDENING ON THE NORTH SIDE OF EXISTING KY 358, AS SHOWN, THROUGH THE TOP BASE COURSE. CONSTRUCT FULL DEPTH CONCRETE PAVEMENT ON NORTH SIDE OF EXISTING KY 358, AS SHOWN. THE MINIMUM ASPHALT WIDENING WIDTH IS 4 FEET. WIDENING AND FULL DEPTH CONSTRUCTION INCLUDES PAVEMENT, GRADING, DRAINAGE, AND ENTRANCES. PIPES CROSSING KY 358 ARE TO BE CONSTRUCTED PART WIDTH UTILIZING TEMPORARY CONNECTIONS TO THE EXISTING PIPE.

→ WHERE PROPOSED GRADE IS HIGHER THAN THE EXISTING EDGE OF DRIVING LANE, CONSTRUCT LEVELING AND WEDGING TO CREATE A FLUSH TRAVEL PATH FOR THE NEXT PHASE WHEN TRAFFIC IS SHIFTED. USE LEVELING AND WEDGING TO ENSURE SMOOTH TRANSITIONS THROUGH TAPERS AREAS AND ASPHALT TO CONCRETE CONNECTIONS.

→ DURING EACH PERIOD OF ACTIVE CONSTRUCTION, THE CONTRACTOR MUST WORK CONTINUOUSLY TO RESTORE THE PORTION OF CONSTRUCTION BEGAN TO THE INDICATED GRADE AND ENSURE A SAFE TRAVEL PATH IN THE VICINITY. THE ONLY EXCEPTION TO THIS WILL BE IN THE AREA OF FULL DEPTH CONCRETE PAVEMENT. THE CONTRACTOR IS RESPONSIBLE TO MAINTAIN A 3:1 WEDGE OR POSITIVE SEPERATION WHEN PAVEMENT DROPOFFS ARE GREATER THAN 4". ADDITIONAL SIGNS, BARRICADES, AND MARKINGS ARE TO BE USED TO CLEARLY INDICATE DROP OFF AREAS, EVEN IN DARK OF LOW LIGHT CONDITIONS.

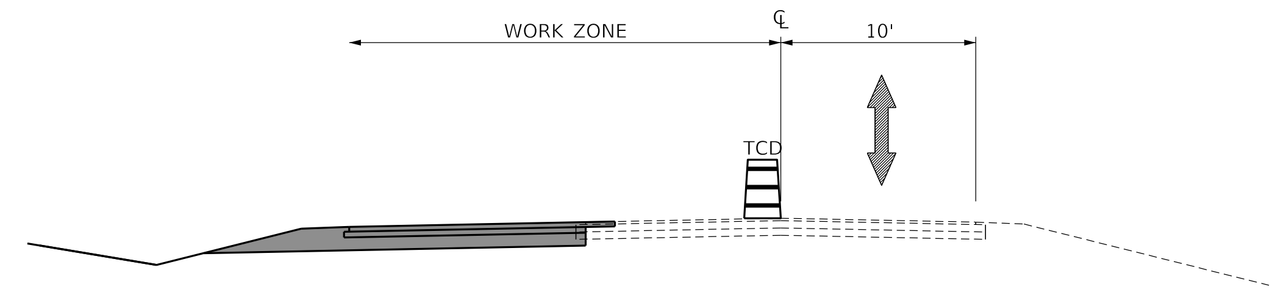

MOT PHASE 2 TYPICAL – ASPHALT PAVEMENT

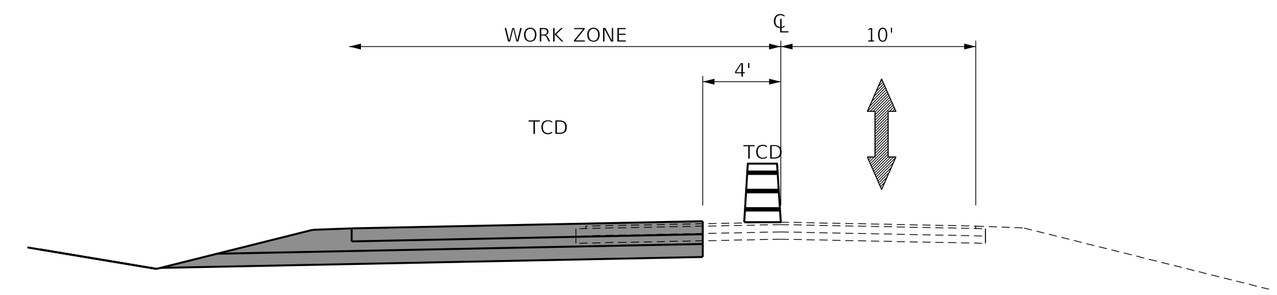

MOT PHASE 2 TYPICAL – CONCRETE PAVEMENT

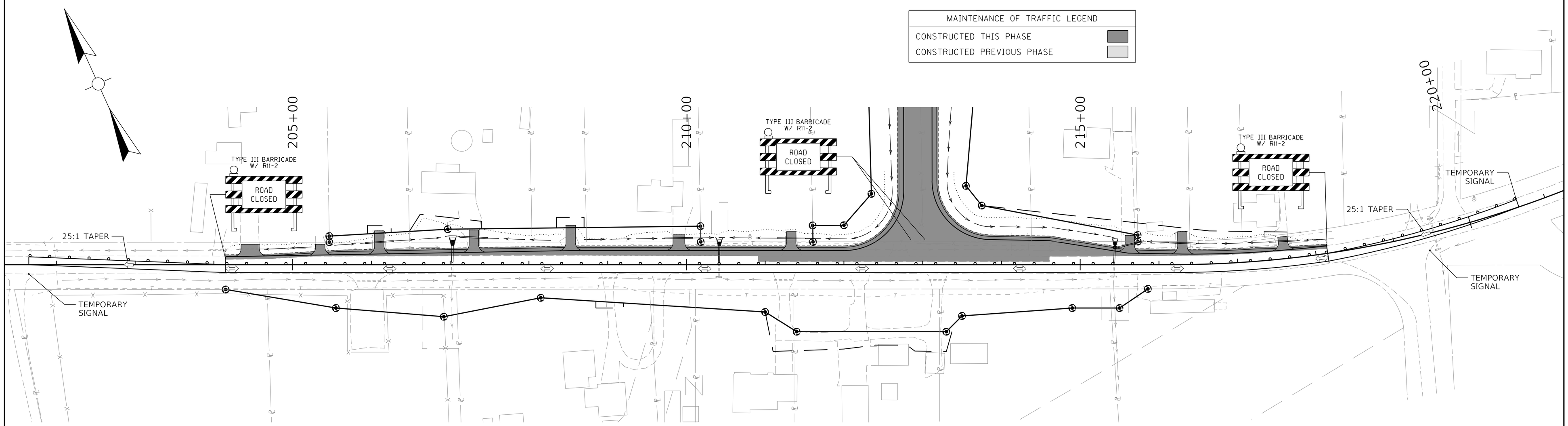

COMMONWEALTH OF KENTUCKY
DEPARTMENT OF HIGHWAYS

TEAM KENTUCKY TRANSPORTATION CABINET

DRAWING TITLE: MOT PHASE 2

HORIZONTAL SCALE
SCALE: 1" = 60'

0' 60' 120' 240'

ITEM NO.	COUNTY OF
1-8702.00	MCCRACKEN
SHEET NO.	
R21	

PHASE 1

→ SEE GEOTECHNICAL REPORTS FOR ROADWAY AND BRIDGE. CONSTRUCT THE DRAINAGE AND EMBANKMENT FOR BOBO ROAD TO A POINT WHERE EXISTING TRAFFIC ON KY 358 IS NOT AFFECTED BY CONSTRUCTION ACTIVITIES. THE CONTRACTOR MUST THEN CEASE WORK IN HIGH EMBANKMENT AREAS AND ALLOW FOR SETTLEMENT OUTLINED IN THE GEOTECHNICAL REPORTS. BRIDGE CONSTRUCTION CAN NOT BEGIN UNTIL SETTLEMENT IS COMPLETED. THE CONTRACTOR IS RESPONSIBLE TO FOLLOW ALL ENVIRONMENTAL GUIDANCE DURING CONSTRUCTION. THE CONTRACTOR IS RESPONSIBLE TO COORDINATE WITH THE RAILROAD WHEN IN THE VICINITY DURING CONSTRUCTION ACTIVITIES.

PHASE 2

→ CLOSE THE EXISTING WEST BOUND LANE OF KY 358. ERECT TEMPORARY SIGNALS, BARRELS, BARRICADES, WARNING SIGNAGE, AND STRIPING CHANGES TO UTILIZE THE EAST BOUND LANE FOR BOTH DIRECTIONS, ONE DIRECTION AT A TIME CONTROLLED BY TEMPORARY SIGNALS. USE TEMPORARY TAPE TO COVER EXISTING CENTERLINE STRIPE THROUGHOUT TAPER AREAS.

→ CONSTRUCT ASPHALT WIDENING ON THE NORTH SIDE OF EXISTING KY 358, AS SHOWN, THROUGH THE TOP BASE COURSE. CONSTRUCT FULL DEPTH CONCRETE PAVEMENT ON NORTH SIDE OF EXISTING KY 358, AS SHOWN. THE MINIMUM ASPHALT WIDENING WIDTH IS 4 FEET. WIDENING AND FULL DEPTH CONSTRUCTION INCLUDES PAVEMENT, GRADING, DRAINAGE, AND ENTRANCES. PIPES CROSSING KY 358 ARE TO BE CONSTRUCTED PART WIDTH UTILIZING TEMPORARY CONNECTIONS TO THE EXISTING PIPE.

→ WHERE PROPOSED GRADE IS HIGHER THAN THE EXISTING EDGE OF DRIVING LANE, CONSTRUCT LEVELING AND WEDGING TO CREATE A FLUSH TRAVEL PATH FOR THE NEXT PHASE WHEN TRAFFIC IS SHIFTED. USE LEVELING AND WEDGING TO ENSURE SMOOTH TRANSITIONS THROUGH TAPERS AREAS AND ASPHALT TO CONCRETE CONNECTIONS.

→ DURING EACH PERIOD OF ACTIVE CONSTRUCTION, THE CONTRACTOR MUST WORK CONTINUOUSLY TO RESTORE THE PORTION OF CONSTRUCTION BEGAN TO THE INDICATED GRADE AND ENSURE A SAFE TRAVEL PATH IN THE VICINITY. THE ONLY EXCEPTION TO THIS WILL BE IN THE AREA OF FULL DEPTH CONCRETE PAVEMENT. THE CONTRACTOR IS RESPONSIBLE TO MAINTAIN A 3:1 WEDGE OR POSITIVE SEPERATION WHEN PAVEMENT DROPOFFS ARE GREATER THAN 4". ADDITIONAL SIGNS, BARRICADES, AND MARKINGS ARE TO BE USED TO CLEARLY INDICATE DROP OFF AREAS, EVEN IN DARK OF LOW LIGHT CONDITIONS.

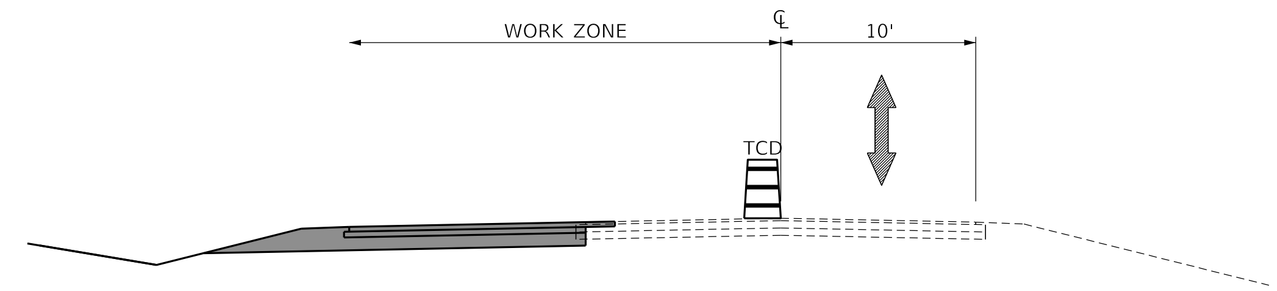

MOT PHASE 2 TYPICAL – ASPHALT PAVEMENT

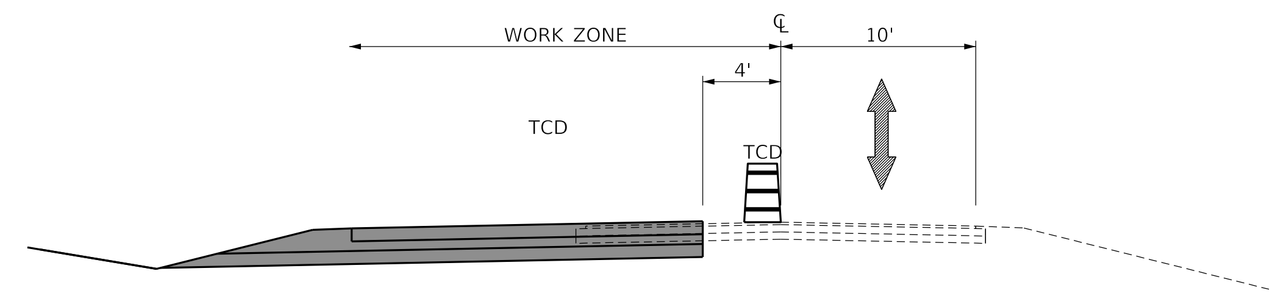

MOT PHASE 2 TYPICAL – CONCRETE PAVEMENT

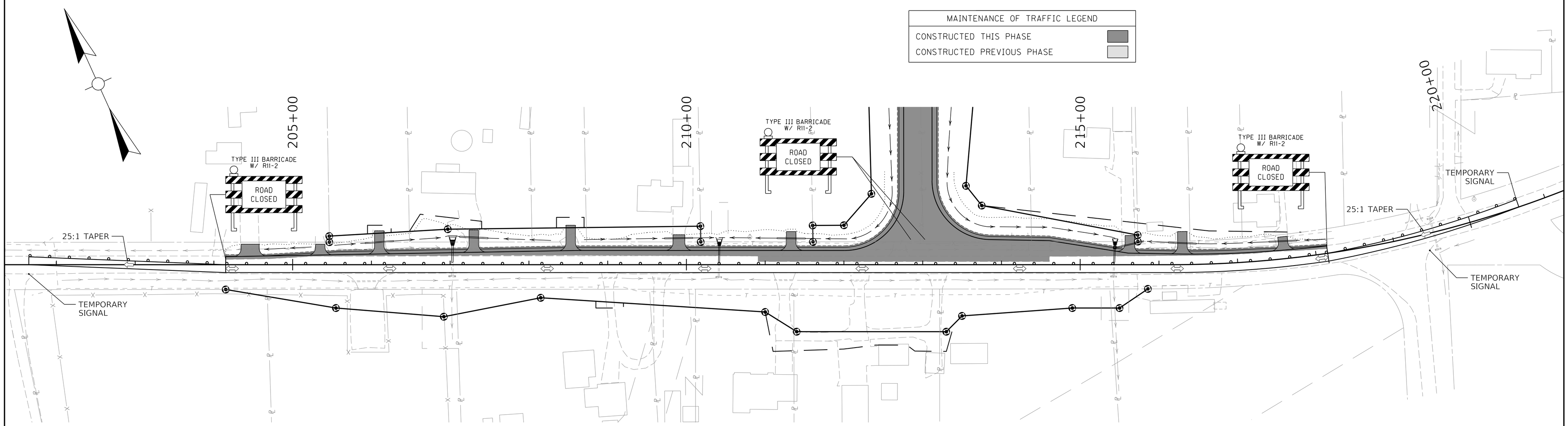

COMMONWEALTH OF KENTUCKY
DEPARTMENT OF HIGHWAYS

TEAM KENTUCKY TRANSPORTATION CABINET

DRAWING TITLE: MOT PHASE 2

HORIZONTAL SCALE
SCALE: 1" = 60'

0' 60' 120' 240'

ITEM NO.	COUNTY OF
1-8702.00	MCCRACKEN
SHEET NO.	
R21	

PHASE 3

→ CLOSE THE EXISTING EAST BOUND LANE OF KY 358. ERECT TEMPORARY SIGNALS, BARRELS, BARRICADES, WARNING SIGNAGE, AND STRIPING CHANGES TO UTILIZE A COMBINATION OF THE WEST BOUND LANE AND CONSTRUCTED WIDENING FOR BOTH DIRECTIONS, ONE DIRECTION AT A TIME CONTROLLED BY TEMPORARY SIGNALS. USE TEMPORARY TAPE TO COVER EXISTING CENTERLINE STRIPE THROUGHOUT TAPER AREAS.

→ CONSTRUCT ASPHALT WIDENING ON THE SOUTH SIDE OF EXISTING KY 358, AS SHOWN, THROUGH THE TOP BASE COURSE. CONSTRUCT FULL DEPTH CONCRETE PAVEMENT ON SOUTH SIDE OF EXISTING KY 358, AS SHOWN. THE MINIMUM ASPHALT WIDENING WIDTH IS 4 FEET. WIDENING AND FULL DEPTH CONSTRUCTION INCLUDES PAVEMENT, GRADING, DRAINAGE, AND ENTRANCES. COMPLETE CONSTRUCTION OF PIPES CROSSING KY 358.

→ WHERE PROPOSED GRADE IS HIGHER THAN THE EXISTING EDGE OF DRIVING LANE, CONSTRUCT LEVELING AND WEDGING TO CREATE A FLUSH TRAVEL PATH FOR THE NEXT PHASE WHEN TRAFFIC IS SHIFTED. USE LEVELING AND WEDGING TO ENSURE SMOOTH TRANSITIONS THROUGH TAPERS AREAS AND ASPHALT TO CONCRETE CONNECTIONS.

→ DURING EACH PERIOD OF ACTIVE CONSTRUCTION, THE CONTRACTOR MUST WORK CONTINUOUSLY TO RESTORE THE PORTION OF CONSTRUCTION BEGAN TO THE INDICATED GRADE AND ENSURE A SAFE TRAVEL PATH IN THE VICINITY. THE ONLY EXCEPTION TO THIS WILL BE IN THE AREA OF FULL DEPTH CONCRETE PAVEMENT. THE CONTRACTOR IS RESPONSIBLE TO MAINTAIN A 3:1 WEDGE OR POSITIVE SEPERATION WHEN PAVEMENT DROPOFFS ARE GREATER THAN 4". ADDITIONAL SIGNS, BARRICADES, AND MARKINGS ARE TO BE USED TO CLEARLY INDICATE DROP OFF AREAS, EVEN IN DARK OF LOW LIGHT CONDITIONS.

PHASE 4

→ SEE GEOTECHNICAL REPORTS FOR ROADWAY AND BRIDGE. CONSTRUCT REMAINING EMBANKMENT WORK AND ASPHALT THROUGH THE TOP BASE COURSE FOR BOBO ROAD. CONSTRUCT PROPOSED BRIDGE FOR BOBO ROAD. THE CONTRACTOR IS RESPONSIBLE TO FOLLOW ALL ENVIRONMENTAL GUIDANCE DURING CONSTRUCTION. THE CONTRACTOR IS RESPONSIBLE TO COORDINATE WITH THE RAILROAD WHEN IN THE VICINITY DURING CONSTRUCTION ACTIVITIES.

PHASE 5

→ UNDER TRAFFIC, DURING NON PEAK HOURS, UTILIZING FLAGGERS AND STANDARD TRAFFIC CONTROL DEVICES, CONSTRUCT THE FINAL ASPHALT SURFACE COURSE FOR KY 358 AND THE NEW BOBO ROAD CORRIDOR.

→ UNDER TRAFFIC, DURING NON PEAK HOURS, UTILIZING FLAGGERS AND STANDARD TRAFFIC CONTROL DEVICES, CONSTRUCT THE FINAL PAVEMENT MARKINGS FOR KY 358 AND THE BOBO ROAD CORRIDOR.

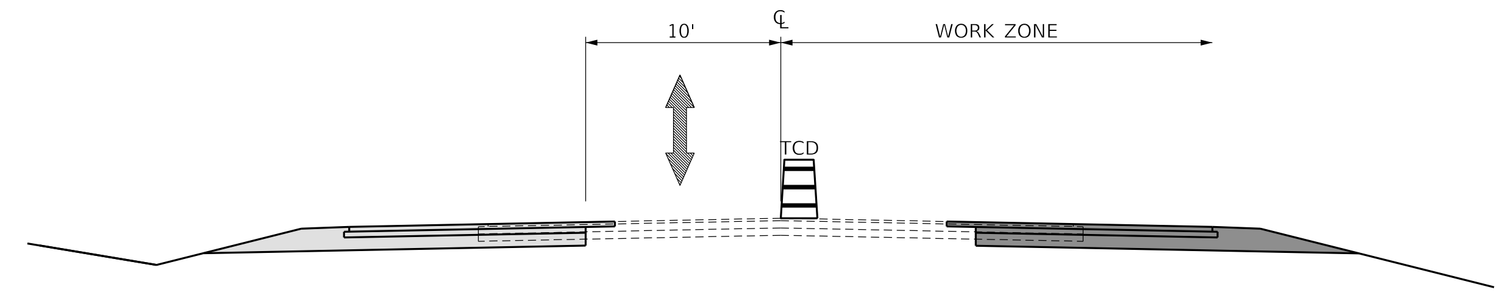

MOT PHASE 3 TYPICAL – ASPHALT PAVEMENT

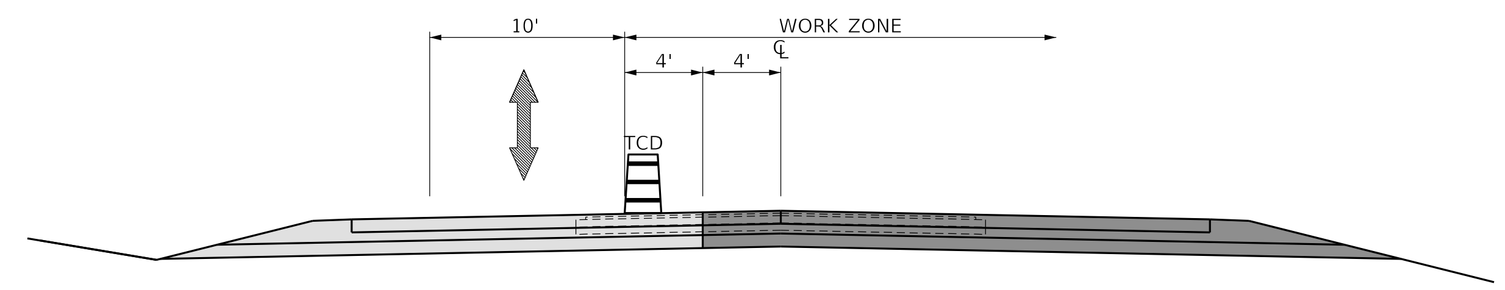

MOT PHASE 3 TYPICAL – CONCRETE PAVEMENT

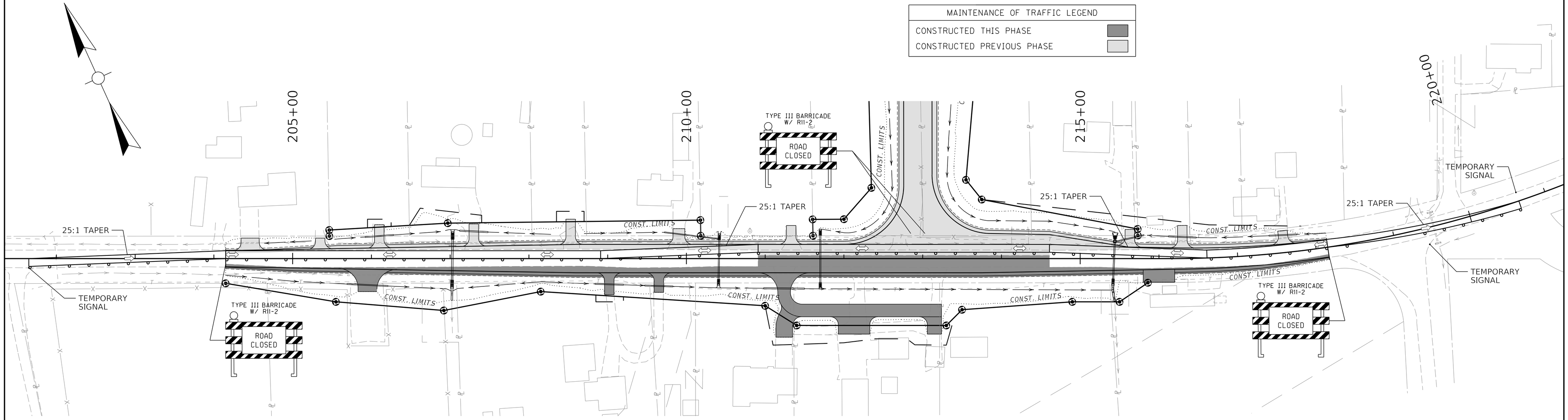

COMMONWEALTH OF KENTUCKY
DEPARTMENT OF HIGHWAYS

TEAM KENTUCKY TRANSPORTATION CABINET

DRAWING TITLE: MOT PHASE 3

HORIZONTAL SCALE
SCALE: 1" = 60'

0' 60' 120' 240'

ITEM NO.	COUNTY OF
1-8702.00	MCCRACKEN
SHEET NO.	
R22	

PHASE 3

→ CLOSE THE EXISTING EAST BOUND LANE OF KY 358. ERECT TEMPORARY SIGNALS, BARRELS, BARRICADES, WARNING SIGNAGE, AND STRIPING CHANGES TO UTILIZE A COMBINATION OF THE WEST BOUND LANE AND CONSTRUCTED WIDENING FOR BOTH DIRECTIONS, ONE DIRECTION AT A TIME CONTROLLED BY TEMPORARY SIGNALS. USE TEMPORARY TAPE TO COVER EXISTING CENTERLINE STRIPE THROUGHOUT TAPER AREAS.

→ CONSTRUCT ASPHALT WIDENING ON THE SOUTH SIDE OF EXISTING KY 358, AS SHOWN, THROUGH THE TOP BASE COURSE. CONSTRUCT FULL DEPTH CONCRETE PAVEMENT ON SOUTH SIDE OF EXISTING KY 358, AS SHOWN. THE MINIMUM ASPHALT WIDENING WIDTH IS 4 FEET. WIDENING AND FULL DEPTH CONSTRUCTION INCLUDES PAVEMENT, GRADING, DRAINAGE, AND ENTRANCES. COMPLETE CONSTRUCTION OF PIPES CROSSING KY 358.

→ WHERE PROPOSED GRADE IS HIGHER THAN THE EXISTING EDGE OF DRIVING LANE, CONSTRUCT LEVELING AND WEDGING TO CREATE A FLUSH TRAVEL PATH FOR THE NEXT PHASE WHEN TRAFFIC IS SHIFTED. USE LEVELING AND WEDGING TO ENSURE SMOOTH TRANSITIONS THROUGH TAPERS AREAS AND ASPHALT TO CONCRETE CONNECTIONS.

→ DURING EACH PERIOD OF ACTIVE CONSTRUCTION, THE CONTRACTOR MUST WORK CONTINUOUSLY TO RESTORE THE PORTION OF CONSTRUCTION BEGAN TO THE INDICATED GRADE AND ENSURE A SAFE TRAVEL PATH IN THE VICINITY. THE ONLY EXCEPTION TO THIS WILL BE IN THE AREA OF FULL DEPTH CONCRETE PAVEMENT. THE CONTRACTOR IS RESPONSIBLE TO MAINTAIN A 3:1 WEDGE OR POSITIVE SEPERATION WHEN PAVEMENT DROPOFFS ARE GREATER THAN 4". ADDITIONAL SIGNS, BARRICADES, AND MARKINGS ARE TO BE USED TO CLEARLY INDICATE DROP OFF AREAS, EVEN IN DARK OF LOW LIGHT CONDITIONS.

PHASE 4

→ SEE GEOTECHNICAL REPORTS FOR ROADWAY AND BRIDGE. CONSTRUCT REMAINING EMBANKMENT WORK AND ASPHALT THROUGH THE TOP BASE COURSE FOR BOBO ROAD. CONSTRUCT PROPOSED BRIDGE FOR BOBO ROAD. THE CONTRACTOR IS RESPONSIBLE TO FOLLOW ALL ENVIRONMENTAL GUIDANCE DURING CONSTRUCTION. THE CONTRACTOR IS RESPONSIBLE TO COORDINATE WITH THE RAILROAD WHEN IN THE VICINITY DURING CONSTRUCTION ACTIVITIES.

PHASE 5

→ UNDER TRAFFIC, DURING NON PEAK HOURS, UTILIZING FLAGGERS AND STANDARD TRAFFIC CONTROL DEVICES, CONSTRUCT THE FINAL ASPHALT SURFACE COURSE FOR KY 358 AND THE NEW BOBO ROAD CORRIDOR.

→ UNDER TRAFFIC, DURING NON PEAK HOURS, UTILIZING FLAGGERS AND STANDARD TRAFFIC CONTROL DEVICES, CONSTRUCT THE FINAL PAVEMENT MARKINGS FOR KY 358 AND THE BOBO ROAD CORRIDOR.

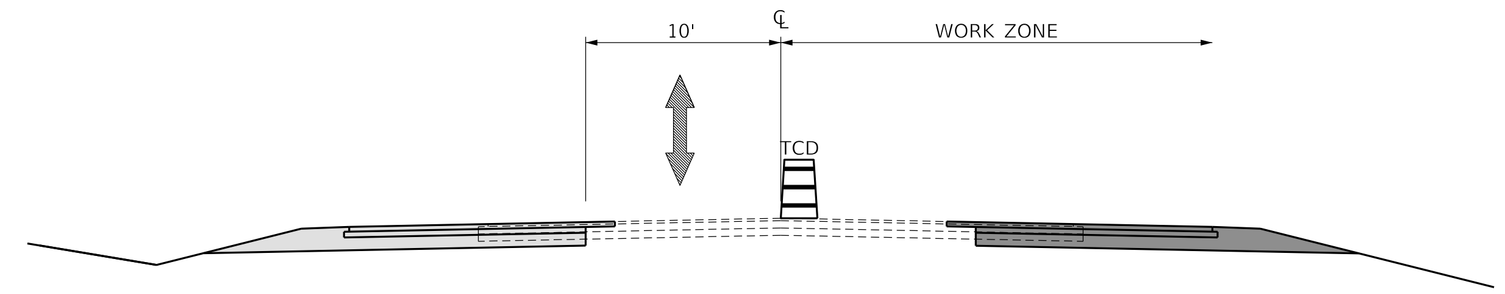

MOT PHASE 3 TYPICAL – ASPHALT PAVEMENT

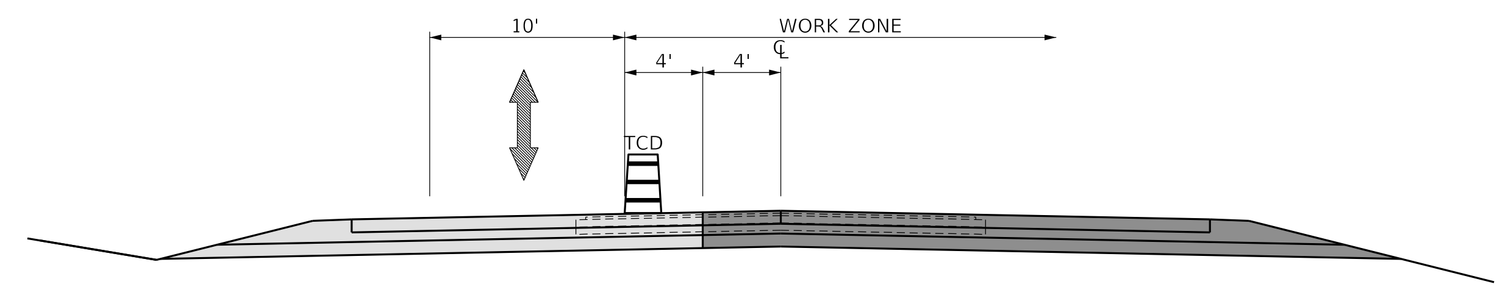

MOT PHASE 3 TYPICAL – CONCRETE PAVEMENT

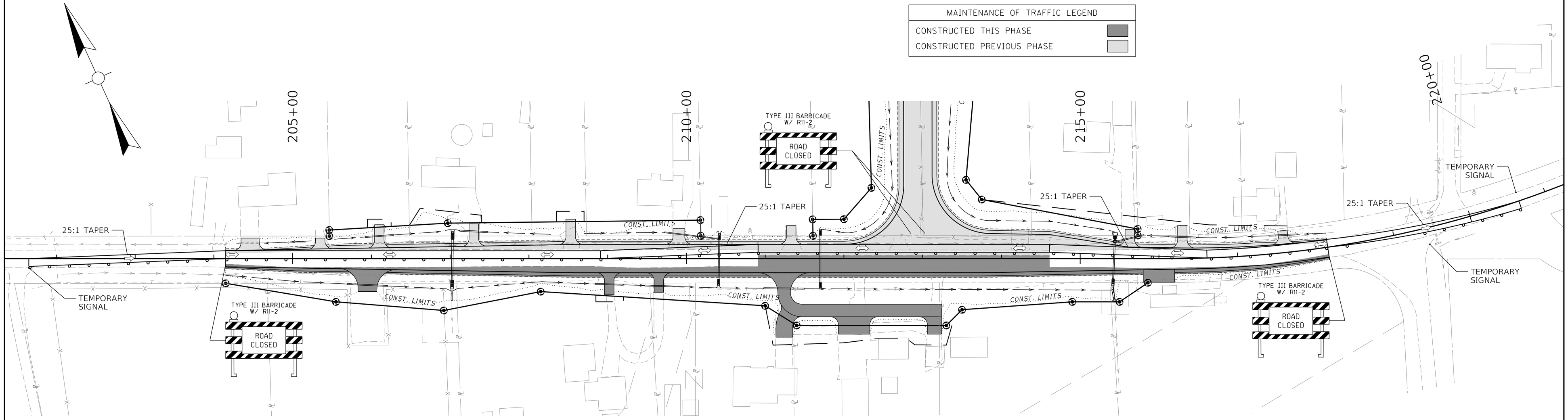

COMMONWEALTH OF KENTUCKY
DEPARTMENT OF HIGHWAYS

TEAM KENTUCKY TRANSPORTATION CABINET

DRAWING TITLE: MOT PHASE 3

HORIZONTAL SCALE
SCALE: 1" = 60'

0' 60' 120' 240'

ITEM NO. 1-8702.00

COUNTY OF MCCRACKEN

SHEET NO. R22

LETTING DATE

CONSTRUCTION PROJECT NO.

TRANSPORTATION CABINET
DEPARTMENT OF HIGHWAYS

McCRACKEN COUNTY
BOBO ROAD EXTENSION
OVER UNNAMED STREAM
STA. 113+49.29

ESTIMATE OF QUANTITIES

BID CODE	ITEM	QUANTITY	UNIT
08003	Foundation Preparation	1	L.S.
08100	Concrete Class "A"	211	C.Y.
08150	Steel Reinforcement	32,487	LBS.
02223	Granular Embankment	465	C.Y.

STATE OF KENTUCKY
SAM K. KING
27051
LICENSED
PROFESSIONAL ENGINEER

INDEX OF SHEETS

Sheet No.	Description
S1	Title Sheet
S2	General Notes
S3	Culvert Layout
S4	Barrel
S5	Parapet & Apron
S6	15'-6" Wing Details
S7	Subsurface Data

SPECIAL NOTES

SPECIAL PROVISIONS

STANDARD DRAWINGS

BGX-006-10	Stencils for Structures
BGX-012-02	Geotechnical Legend

SPECIFICATIONS

2019 Standard Specifications for Road and Bridge Construction.

2020 (9th Edition) AASHTO LRFD Bridge Design Specifications

COMMONWEALTH OF KENTUCKY
DEPARTMENT OF HIGHWAYS
TEAM KENTUCKY TRANSPORTATION CABINET

REVISION	DATE

PREPARED BY Stantec

DATE: JANUARY 2025	CHECKED BY
DESIGNED BY: J. CAMPBELL	S. KING
DETAILED BY: K. LOMBARD	J. CAMPBELL

TITLE SHEET

CROSSING: UNNAMED STREAM

ROUTE	ITEM NO.	COUNTY OF
BOBO RD EXTENSION	1-8702.00	McCRACKEN
	SHEET NO. S1	DRAWING NUMBER 28912

REVISED 12-08-2025

LETTING DATE

CONSTRUCTION PROJECT NO.

TRANSPORTATION CABINET
DEPARTMENT OF HIGHWAYS

McCRACKEN COUNTY
BOBO ROAD EXTENSION
OVER UNNAMED STREAM
STA. 113+49.29

ESTIMATE OF QUANTITIES

BID CODE	ITEM	QUANTITY	UNIT
08003	Foundation Preparation	1	L.S.
08100	Concrete Class "A"	211	C.Y.
08150	Steel Reinforcement	32,487	LBS.
02223	Granular Embankment	465	C.Y.

STATE OF KENTUCKY
SAM K. KING
27051
LICENSED
PROFESSIONAL ENGINEER

INDEX OF SHEETS

Sheet No.	Description
S1	Title Sheet
S2	General Notes
S3	Culvert Layout
S4	Barrel
S5	Parapet & Apron
S6	15'-6" Wing Details
S7	Subsurface Data

SPECIAL NOTES

SPECIAL PROVISIONS

STANDARD DRAWINGS

BGX-006-10	Stencils for Structures
BGX-012-02	Geotechnical Legend

SPECIFICATIONS

2019 Standard Specifications for Road and Bridge Construction.

2020 (9th Edition) AASHTO LRFD Bridge Design Specifications

COMMONWEALTH OF KENTUCKY
DEPARTMENT OF HIGHWAYS
TEAM KENTUCKY TRANSPORTATION CABINET

REVISION	DATE

PREPARED BY Stantec

DATE: JANUARY 2025	CHECKED BY
DESIGNED BY: J. CAMPBELL	S. KING
DETAILED BY: K. LOMBARD	J. CAMPBELL

TITLE SHEET

CROSSING: UNNAMED STREAM

ROUTE	ITEM NO.	COUNTY OF
BOBO RD EXTENSION	1-8702.00	McCRACKEN
	SHEET NO. S1	DRAWING NUMBER 28912

SPECIFICATIONS

ALL REFERENCES TO THE STANDARD SPECIFICATIONS ARE TO THE 2019 EDITION OF THE KENTUCKY DEPARTMENT OF HIGHWAYS STANDARD SPECIFICATIONS FOR ROAD AND BRIDGE CONSTRUCTION WITH SUPPLEMENTAL SPECIFICATIONS AS OF OCTOBER 25, 2021.

ALL REFERENCES TO THE AASHTO SPECIFICATIONS ARE TO THE LRFD BRIDGE DESIGN SPECIFICATIONS, 9th EDITION.

DESIGN LOAD

THIS CULVERT IS DESIGNED FOR KYHL-93 (HL-93 INCREASED BY 25%).
THE ASSUMED DENSITY OF FILL MATERIAL IS 120 PCF.
THE ASSUMED EQUIVALENT LATERAL FLUID PRESSURE IS 45 PCF.

DESIGN METHOD

ALL REINFORCED CONCRETE MEMBERS ARE DESIGNED BY THE LOAD AND RESISTANCE FACTOR METHOD AS SPECIFIED IN THE CURRENT AASHTO SPECIFICATIONS.

MATERIALS DESIGN SPECIFICATIONS

FOR CLASS "A" REINFORCED CONCRETE	F'C = 3500 psi
FOR STEEL REINFORCEMENT	FY = 60000 psi

CONCRETE

CLASS "A" CONCRETE IS TO BE USED THROUGHOUT.

REINFORCEMENT

DIMENSIONS SHOWN FROM THE FACE OF CONCRETE TO BARS ARE TO CENTER OF BAR UNLESS OTHERWISE SHOWN. SPACING OF BARS IS FROM CENTER TO CENTER OF BARS. ANY REINFORCING BARS DESIGNATED BY SUFFIX "e" IN THE PLANS SHALL BE EPOXY COATED IN ACCORDANCE WITH SECTION 811.10 OF THE STANDARD SPECIFICATIONS. ANY REINFORCING BARS DESIGNATED BY SUFFIX "s" IN A BILL OF REINFORCEMENT SHALL BE CONSIDERED A STIRRUP FOR PURPOSES OF BEND DIAMETERS.

FLOWLINE REINFORCEMENT

REINFORCEMENT IN THE 6 IN THICK SLAB SHALL BE SIZE 4 BARS AT 18 IN CENTERS IN EACH DIRECTION OR AN EQUIVALENT AREA OF WELDED DEFORMED STEEL FABRIC. THE BARS SHALL EXTEND A MINIMUM OF 12 IN INTO WING FOOTINGS AND/OR THE BOTTOM SLAB. THE COST OF THIS REINFORCEMENT SHALL BE INCIDENTAL TO THE UNIT PRICE BID FOR CONCRETE, CLASS "A".

BEVELED EDGES

ALL EXPOSED EDGES SHALL BE BEVELED ¾" UNLESS OTHERWISE SHOWN.

UTILITIES

THE CONTRACTOR SHALL BE RESPONSIBLE FOR LOCATING ANY AND ALL EXISTING UTILITIES PRIOR TO EXCAVATION OF MATERIAL OR INSTALLATION OF GUARDRAIL OR OTHER CONSTRUCTION ACTIVITIES THAT MAY INVOLVE UTILITIES (OVERHEAD OR UNDERGROUND).

BEFORE YOU DIG

THE CONTRACTOR SHALL BE RESPONSIBLE FOR ALL REQUIREMENTS AND CONFORMATION WITH THE UNDERGROUND FACILITY DAMAGE PREVENTION ACT OF 1994. THE CONTRACTOR WILL BE RESPONSIBLE FOR LOCATING ANY UTILITIES ON THIS PROJECT. ALL UNDERGROUND UTILITIES SHALL BE LOCATED PRIOR TO CONSTRUCTION. ANY UTILITIES DISTURBED OR DAMAGED AS A RESULT OF THE CONTRACTOR'S OPERATIONS WILL BE REPAIRED TO THE SATISFACTION OF THE UTILITY OWNER AT THE CONTRACTOR'S EXPENSE. THE CONTRACTOR IS ADVISED TO CALL (800) 752-6007 A MINIMUM OF TWO WORKING DAYS PRIOR TO EXCAVATION FOR INFORMATION ON THE LOCATION OF SOME BUT NOT NECESSARILY ALL UNDERGROUND UTILITIES.

COMPLETION OF THE STRUCTURE

THE CONTRACTOR IS REQUIRED TO COMPLETE THE STRUCTURE IN ACCORDANCE WITH THE PLANS AND SPECIFICATIONS. MATERIAL, LABOR OR CONSTRUCTION OPERATIONS, NOT OTHERWISE SPECIFIED, ARE TO BE INCLUDED IN THE BID ITEM MOST APPROPRIATE TO THE WORK INVOLVED. THIS MAY INCLUDE COFFERDAMS, SHORING, EXCAVATIONS, BACKFILLING, REMOVAL OF ALL OR PARTS OF EXISTING STRUCTURES, PHASE CONSTRUCTION, INCIDENTAL MATERIALS, LABOR, OR ANYTHING ELSE REQUIRED TO COMPLETE THE STRUCTURE.

DIMENSIONS

DIMENSIONS ARE FOR A NORMAL TEMPERATURE OF 60 DEGREES FAHRENHEIT. LAYOUT DIMENSIONS ARE HORIZONTAL DIMENSIONS.

GEOTECHNICAL

FOR ADDITIONAL NOTES AND GEOTECHNICAL INFORMATION SEE GEOTECHNICAL REPORT. BY REFERENCE THE REPORT IS PART OF THE CONTRACT DOCUMENTS.

STRUCTURE EXCAVATION

SHEETING, SHORING, DEWATERING OR COFFERDAMS MAY BE NECESSARY FOR CONSTRUCTION OF THE CULVERT THE COST OF ANY OF THESE ITEMS SHALL BE INCLUDED IN THE LUMP SUM BID FOR FOUNDATION PREPARATION.

FOOTING PRESSURE

THE FACTORED BEARING RESISTANCE AT THE SERVICE LIMIT STATE IS 1.1 ksf.

CONSTRUCTION JOINTS

VERTICAL CONSTRUCTION JOINTS SHALL BE LOCATED IN THE FIELD, EXCEPT THAT NO CONSTRUCTION JOINT SHALL BE LOCATED IN THE BARREL WITHIN SIX FEET OF THE ENDS OF THE CULVERT.

REMOVE EXISTING CULVERT

REMOVE EXISTING CULVERT IN ACCORDANCE WITH THE ROADWAY PLANS.

WEEP HOLES

PROVIDE WEEP HOLES IN THE WINGWALLS OF THE CULVERT IN ACCORDANCE WITH SECTION 610.03.03 OF THE STANDARD SPECIFICATIONS.

FOUNDATION NOTE

FOR THE PURPOSE OF MAINTAINING UNIFORM YIELDING CONDITIONS, ANY BEDROCK, BOULDERS OR SOFT SOIL MATERIALS ENCOUNTERED WITHIN FIVE FEET OF THE BOTTOM OF FOOTING ELEVATION (CULVERT AND WINGWALLS) SHALL BE OVER EXCAVATED AND THE RESULTING EXCAVATION BACKFILLED WITH PROPERLY COMPACTED GRANULAR EMBANKMENT IN ACCORDANCE WITH SECTION 805 OF THE CURRENT KYTC STANDARD SPECIFICATIONS FOR ROAD AND BRIDGE CONSTRUCTION.

THE COST OF THIS WORK SHALL BE INCLUDED IN THE UNIT BID PRICE FOR FOUNDATION PREPARATION, EXCEPT GRANULAR EMBANKMENT WILL BE PAID PER CUBIC YARD AS MEASURED DURING INSTALLATION.

ABBREVIATIONS

℄	BASELINE
℄	CENTERLINE
FL	FLANGE
PL	PLATE
ABUT	ABUTMENT
ALT	ALTERNATE
APPR	APPROACH
APPROX	APPROXIMATE
BF	BACK FACE
BARR	BARRIER
BKWL	BACKWALL
BM	BEAM
BM	BENCHMARK
BOS	BOTTOM OF SLAB
BRG	BEARING
BTM	BOTTOM
BTWN	BETWEEN
CE	CURRENT EDITION
CHD	CHORD
CLR	CLEAR
COL	COLUMN
CONC	CONCRETE
CONN	CONNECTION
CONST	CONSTRUCTION
CTR	CENTER
CVN	CHARPY V-NOTCH
DEG	DEGREE
DET	DETAIL
DIA	DIAMETER
DIAPH	DIAPHRAGM
DIM	DIMENSION
DWG	DRAWING
EA	EACH
EB	EASTBOUND
EF	EACH FACE
EL	ELEVATION
EQ	EQUAL
EQUIV	EQUIVALENT
ETC	ETCETERA
EW	EACH WAY
EX	EXISTING
EXIST	EXISTING
EXP	EXPANSION
FF	FRONT FACE
FS	FIELD SPLICE
FT	FEET
FTG	FOOTING
GALV	GALVANIZED
HORIZ	HORIZONTAL
HS	HIGH STRENGTH
ID	INSIDE DIAMETER
IN	INCH
IEB	INTEGRAL END BENT
JB	JUNCTION BOX
JT	JOINT
JUNC	JUNCTION
LP	LIGHT POLE
LT	LEFT
LONG	LONGITUDINAL
MAX	MAXIMUM
MED	MEDIAN
MIN	MINIMUM
MOM	MOMENT
NB	NORTHBOUND
NEG	NEGATIVE
NEOP	NEOPRENE
NOM	NOMINAL
OD	OUTSIDE DIAMETER
OS	OVERSIZED
PERF	PERFORATED
PG	PROFILE GRADE
PPC	PRECAST PRESTRESSED CONCRETE
PR	PAIR
PREF	PREFORMED
PROJ	PROJECTION
PRS	PAIRS
PSI	POUNDS PER SQUARE INCH
R	RADIUS
RAD	RADIUS
RDWY	ROADWAY
REINF	REINFORCEMENT
RELOC	RELOCATED
REQD	REQUIRED
RR	RAILROAD
RT	RIGHT
RTE	ROUTE
SB	SOUTHBOUND
SEC	SECTION
SER	SERIES
SHLD	SHOULDER
SHT	SHEET
SPA	SPACES
SS	STAINLESS STEEL
STA	STATION
STD	STANDARD
STIFF	STIFFENER
STR	STRAIGHT
SYS	SYSTEM
TEMP	TEMPORARY
THRU	THROUGH
TOS	TOP OF SLAB
TYP	TYPICAL
UNO	UNLESS NOTED OTHERWISE
VERT	VERTICAL
WB	WESTBOUND
WP	WORKING POINT

REVISED 12-08-2025

SPECIFICATIONS

ALL REFERENCES TO THE STANDARD SPECIFICATIONS ARE TO THE 2019 EDITION OF THE KENTUCKY DEPARTMENT OF HIGHWAYS STANDARD SPECIFICATIONS FOR ROAD AND BRIDGE CONSTRUCTION WITH SUPPLEMENTAL SPECIFICATIONS AS OF OCTOBER 25, 2021.

ALL REFERENCES TO THE AASHTO SPECIFICATIONS ARE TO THE LRFD BRIDGE DESIGN SPECIFICATIONS, 9th EDITION.

DESIGN LOAD

THIS CULVERT IS DESIGNED FOR KYHL-93 (HL-93 INCREASED BY 25%).
THE ASSUMED DENSITY OF FILL MATERIAL IS 120 PCF.
THE ASSUMED EQUIVALENT LATERAL FLUID PRESSURE IS 45 PCF.

DESIGN METHOD

ALL REINFORCED CONCRETE MEMBERS ARE DESIGNED BY THE LOAD AND RESISTANCE FACTOR METHOD AS SPECIFIED IN THE CURRENT AASHTO SPECIFICATIONS.

MATERIALS DESIGN SPECIFICATIONS

FOR CLASS "A" REINFORCED CONCRETE	F'C = 3500 psi
FOR STEEL REINFORCEMENT	FY = 60000 psi

CONCRETE

CLASS "A" CONCRETE IS TO BE USED THROUGHOUT.

REINFORCEMENT

DIMENSIONS SHOWN FROM THE FACE OF CONCRETE TO BARS ARE TO CENTER OF BAR UNLESS OTHERWISE SHOWN. SPACING OF BARS IS FROM CENTER TO CENTER OF BARS. ANY REINFORCING BARS DESIGNATED BY SUFFIX "e" IN THE PLANS SHALL BE EPOXY COATED IN ACCORDANCE WITH SECTION 811.10 OF THE STANDARD SPECIFICATIONS. ANY REINFORCING BARS DESIGNATED BY SUFFIX "s" IN A BILL OF REINFORCEMENT SHALL BE CONSIDERED A STIRRUP FOR PURPOSES OF BEND DIAMETERS.

FLOWLINE REINFORCEMENT

REINFORCEMENT IN THE 6 IN THICK SLAB SHALL BE SIZE 4 BARS AT 18 IN CENTERS IN EACH DIRECTION OR AN EQUIVALENT AREA OF WELDED DEFORMED STEEL FABRIC. THE BARS SHALL EXTEND A MINIMUM OF 12 IN INTO WING FOOTINGS AND/OR THE BOTTOM SLAB. THE COST OF THIS REINFORCEMENT SHALL BE INCIDENTAL TO THE UNIT PRICE BID FOR CONCRETE, CLASS "A".

BEVELED EDGES

ALL EXPOSED EDGES SHALL BE BEVELED ¾" UNLESS OTHERWISE SHOWN.

UTILITIES

THE CONTRACTOR SHALL BE RESPONSIBLE FOR LOCATING ANY AND ALL EXISTING UTILITIES PRIOR TO EXCAVATION OF MATERIAL OR INSTALLATION OF GUARDRAIL OR OTHER CONSTRUCTION ACTIVITIES THAT MAY INVOLVE UTILITIES (OVERHEAD OR UNDERGROUND).

BEFORE YOU DIG

THE CONTRACTOR SHALL BE RESPONSIBLE FOR ALL REQUIREMENTS AND CONFORMATION WITH THE UNDERGROUND FACILITY DAMAGE PREVENTION ACT OF 1994. THE CONTRACTOR WILL BE RESPONSIBLE FOR LOCATING ANY UTILITIES ON THIS PROJECT. ALL UNDERGROUND UTILITIES SHALL BE LOCATED PRIOR TO CONSTRUCTION. ANY UTILITIES DISTURBED OR DAMAGED AS A RESULT OF THE CONTRACTOR'S OPERATIONS WILL BE REPAIRED TO THE SATISFACTION OF THE UTILITY OWNER AT THE CONTRACTOR'S EXPENSE. THE CONTRACTOR IS ADVISED TO CALL (800) 752-6007 A MINIMUM OF TWO WORKING DAYS PRIOR TO EXCAVATION FOR INFORMATION ON THE LOCATION OF SOME BUT NOT NECESSARILY ALL UNDERGROUND UTILITIES.

COMPLETION OF THE STRUCTURE

THE CONTRACTOR IS REQUIRED TO COMPLETE THE STRUCTURE IN ACCORDANCE WITH THE PLANS AND SPECIFICATIONS. MATERIAL, LABOR OR CONSTRUCTION OPERATIONS, NOT OTHERWISE SPECIFIED, ARE TO BE INCLUDED IN THE BID ITEM MOST APPROPRIATE TO THE WORK INVOLVED. THIS MAY INCLUDE COFFERDAMS, SHORING, EXCAVATIONS, BACKFILLING, REMOVAL OF ALL OR PARTS OF EXISTING STRUCTURES, PHASE CONSTRUCTION, INCIDENTAL MATERIALS, LABOR, OR ANYTHING ELSE REQUIRED TO COMPLETE THE STRUCTURE.

DIMENSIONS

DIMENSIONS ARE FOR A NORMAL TEMPERATURE OF 60 DEGREES FAHRENHEIT. LAYOUT DIMENSIONS ARE HORIZONTAL DIMENSIONS.

GEOTECHNICAL

FOR ADDITIONAL NOTES AND GEOTECHNICAL INFORMATION SEE GEOTECHNICAL REPORT. BY REFERENCE THE REPORT IS PART OF THE CONTRACT DOCUMENTS.

STRUCTURE EXCAVATION

SHEETING, SHORING, DEWATERING OR COFFERDAMS MAY BE NECESSARY FOR CONSTRUCTION OF THE CULVERT THE COST OF ANY OF THESE ITEMS SHALL BE INCLUDED IN THE LUMP SUM BID FOR FOUNDATION PREPARATION.

FOOTING PRESSURE

THE FACTORED BEARING RESISTANCE AT THE SERVICE LIMIT STATE IS 1.1 ksf.

CONSTRUCTION JOINTS

VERTICAL CONSTRUCTION JOINTS SHALL BE LOCATED IN THE FIELD, EXCEPT THAT NO CONSTRUCTION JOINT SHALL BE LOCATED IN THE BARREL WITHIN SIX FEET OF THE ENDS OF THE CULVERT.

REMOVE EXISTING CULVERT

REMOVE EXISTING CULVERT IN ACCORDANCE WITH THE ROADWAY PLANS.

WEEP HOLES

PROVIDE WEEP HOLES IN THE WINGWALLS OF THE CULVERT IN ACCORDANCE WITH SECTION 610.03.03 OF THE STANDARD SPECIFICATIONS.

FOUNDATION NOTE

FOR THE PURPOSE OF MAINTAINING UNIFORM YIELDING CONDITIONS, ANY BEDROCK, BOULDERS OR SOFT SOIL MATERIALS ENCOUNTERED WITHIN FIVE FEET OF THE BOTTOM OF FOOTING ELEVATION (CULVERT AND WINGWALLS) SHALL BE OVER EXCAVATED AND THE RESULTING EXCAVATION BACKFILLED WITH PROPERLY COMPACTED GRANULAR EMBANKMENT IN ACCORDANCE WITH SECTION 805 OF THE CURRENT KYTC STANDARD SPECIFICATIONS FOR ROAD AND BRIDGE CONSTRUCTION.

THE COST OF THIS WORK SHALL BE INCLUDED IN THE UNIT BID PRICE FOR FOUNDATION PREPARATION, EXCEPT GRANULAR EMBANKMENT WILL BE PAID PER CUBIC YARD AS MEASURED DURING INSTALLATION.

ABBREVIATIONS

℄	BASELINE
℄	CENTERLINE
FL	FLANGE
PL	PLATE
ABUT	ABUTMENT
ALT	ALTERNATE
APPR	APPROACH
APPROX	APPROXIMATE
BF	BACK FACE
BARR	BARRIER
BKWL	BACKWALL
BM	BEAM
BM	BENCHMARK
BOS	BOTTOM OF SLAB
BRG	BEARING
BTM	BOTTOM
BTWN	BETWEEN
CE	CURRENT EDITION
CHD	CHORD
CLR	CLEAR
COL	COLUMN
CONC	CONCRETE
CONN	CONNECTION
CONST	CONSTRUCTION
CTR	CENTER
CVN	CHARPY V-NOTCH
DEG	DEGREE
DET	DETAIL
DIA	DIAMETER
DIAPH	DIAPHRAGM
DIM	DIMENSION
DWG	DRAWING
EA	EACH
EB	EASTBOUND
EF	EACH FACE
EL	ELEVATION
EQ	EQUAL
EQUIV	EQUIVALENT
ETC	ETCETERA
EW	EACH WAY
EX	EXISTING
EXIST	EXISTING
EXP	EXPANSION
FF	FRONT FACE
FS	FIELD SPLICE
FT	FEET
FTG	FOOTING
GALV	GALVANIZED
HORIZ	HORIZONTAL
HS	HIGH STRENGTH
ID	INSIDE DIAMETER
IN	INCH
IEB	INTEGRAL END BENT
JB	JUNCTION BOX
JT	JOINT
JUNC	JUNCTION
LP	LIGHT POLE
LT	LEFT
LONG	LONGITUDINAL
MAX	MAXIMUM
MED	MEDIAN
MIN	MINIMUM
MOM	MOMENT
NB	NORTHBOUND
NEG	NEGATIVE
NEOP	NEOPRENE
NOM	NOMINAL
OD	OUTSIDE DIAMETER
OS	OVERSIZED
PERF	PERFORATED
PG	PROFILE GRADE
PPC	PRECAST PRESTRESSED CONCRETE
PR	PAIR
PREF	PREFORMED
PROJ	PROJECTION
PRS	PAIRS
PSI	POUNDS PER SQUARE INCH
R	RADIUS
RAD	RADIUS
RDWY	ROADWAY
REINF	REINFORCEMENT
RELOC	RELOCATED
REQD	REQUIRED
RR	RAILROAD
RT	RIGHT
RTE	ROUTE
SB	SOUTHBOUND
SEC	SECTION
SER	SERIES
SHLD	SHOULDER
SHT	SHEET
SPA	SPACES
SS	STAINLESS STEEL
STA	STATION
STD	STANDARD
STIFF	STIFFENER
STR	STRAIGHT
SYS	SYSTEM
TEMP	TEMPORARY
THRU	THROUGH
TOS	TOP OF SLAB
TYP	TYPICAL
UNO	UNLESS NOTED OTHERWISE
VERT	VERTICAL
WB	WESTBOUND
WP	WORKING POINT

SPECIFICATIONS

ALL REFERENCES TO THE STANDARD SPECIFICATIONS ARE TO THE 2019 EDITION OF THE KENTUCKY DEPARTMENT OF HIGHWAYS STANDARD SPECIFICATIONS FOR ROAD AND BRIDGE CONSTRUCTION WITH CURRENT SUPPLEMENTAL SPECIFICATIONS.

ALL REFERENCES TO THE AASHTO SPECIFICATIONS ARE TO THE LRFD BRIDGE DESIGN SPECIFICATIONS, 9th EDITION.

DESIGN LOAD

THIS BRIDGE IS DESIGNED FOR KYHL-93 (HL-93 INCREASED BY 25%).
THIS BRIDGE IS DESIGNED FOR A FUTURE WEARING SURFACE OF 15 PSF.
THIS BRIDGE IS DESIGNED FOR A WIND LOAD BASED ON A WIND VELOCITY OF 100 MPH.

DESIGN METHOD

ALL REINFORCED CONCRETE MEMBERS ARE DESIGNED BY THE LOAD AND RESISTANCE FACTOR METHOD AS SPECIFIED IN THE CURRENT AASHTO SPECIFICATIONS.

MATERIALS DESIGN SPECIFICATIONS

FOR CLASS "A" REINFORCED CONCRETE	F'C = 3500 psi
FOR CLASS "AA" REINFORCED CONCRETE	F'C = 4000 psi
FOR STEEL REINFORCEMENT	FY = 60000 psi
FOR PRESTRESSED GIRDER CONCRETE	F'C = 8000 psi
FOR PRESTRESSING STRANDS	F'S = 270000 psi
FOR STEEL PILING	FY = 50000 psi

PREFORMED SPONGE RUBBER EXPANSION JOINT MATERIAL

PREFORMED SPONGE RUBBER EXPANSION JOINT MATERIAL SHALL CONFORM TO SUBSECTION 807.04.02 (TYPE 1) OF THE KENTUCKY DEPARTMENT OF HIGHWAYS STANDARD SPECIFICATIONS. COST OF PREFORMED SPONGE RUBBER IS TO BE INCLUDED IN THE UNIT BID PRICE FOR PRESTRESSED BEAMS.

CONCRETE

CLASS "AA" CONCRETE IS TO BE USED THROUGHOUT THE SUPERSTRUCTURE AND IN THE PORTIONS OF THE SUBSTRUCTURE ABOVE THE TOPS OF CAPS. CLASS "A" CONCRETE IS TO BE USED IN THE SUBSTRUCTURE BELOW THE TOP OF CAPS. PRESTRESSED BEAM CONCRETE SHALL BE IN ACCORDANCE WITH THE PLANS AND SPECIFICATIONS.

REINFORCEMENT

DIMENSIONS SHOWN FROM THE FACE OF CONCRETE TO BARS ARE TO CENTER OF BAR UNLESS OTHERWISE SHOWN. SPACING OF BARS IS FROM CENTER TO CENTER OF BARS. ANY REINFORCING BARS DESIGNATED BY SUFFIX "e" IN THE PLANS SHALL BE EPOXY COATED IN ACCORDANCE WITH SECTION 811.10 OF THE STANDARD SPECIFICATIONS. ANY REINFORCING BARS DESIGNATED BY SUFFIX "s" IN A BILL OF REINFORCEMENT SHALL BE CONSIDERED A STIRRUP FOR PURPOSES OF BEND DIAMETERS.

CONSTRUCTION IDENTIFICATION

APPLY STENCILS FOR STRUCTURES IN ACCORDANCE WITH STANDARD DRAWING BGX-006, C.E. THE CONTRACTOR SHALL FURNISH ALL PLANS, EQUIPMENT, AND LABOR NECESSARY TO DO THE WORK FOR WHICH NO DIRECT PAYMENT WILL BE MADE.

BEVELED EDGES

ALL EXPOSED EDGES SHALL BE BEVELED ¾" UNLESS OTHERWISE SHOWN.

SLOPE PROTECTION

SLOPE PROTECTION SHALL BE CRUSHED AGGREGATE SLOPE PROTECTION IN ACCORDANCE WITH THE PLANS AND SPECIFICATIONS. GEOTEXTILE FABRIC, CLASS 1 SHALL BE PLACED BETWEEN THE EMBANKMENT AND THE SLOPE PROTECTION IN ACCORDANCE WITH STANDARD SPECIFICATIONS 214 AND 843. PAYMENT FOR GEOTEXTILE FABRIC, CLASS 1, SHALL BE CONSIDERED INCIDENTAL TO THE UNIT PRICE BID FOR CRUSHED AGGREGATE SLOPE PROTECTION.

CONCRETE SEALING

CONTRARY TO THE SPECIFICATIONS, DO NOT APPLY MASONRY COATING. INSTEAD APPLY CONCRETE SEALING IN ACCORDANCE WITH THE SPECIAL NOTE FOR CONCRETE SEALING.

SEISMIC DESIGN

THIS BRIDGE HAS BEEN DESIGNED FOR SEISMIC ZONE 3 CRITERIA FROM AASHTO LRFD.

FOUNDATION DATA

SEE FOUNDATION LAYOUT AND PILE RECORD.

PILING

SEE DRIVING CRITERIA NOTE ON THE PILE RECORD SHEET.

TEST PILES SHALL BE DRIVEN WHERE DESIGNATED ON THE PLANS TO DETERMINE THE LENGTH OF PILE REQUIRED.

ALL TEST PILES SHALL BE ACCURATELY LOCATED SO THAT THEY MAY BE USED IN THE FINISHED STRUCTURE.

SHOP DRAWINGS

FABRICATORS SHALL SUBMIT ALL REQUIRED SHOP PLANS, BY EMAIL, TO THE DESIGN CONSULTANT FOR REVIEW. THESE SUBMISSIONS SHALL DEPICT THE SHOP PLANS, IN .PDF FORMAT, AS EITHER 11"x17" OR 22"x36" SHEETS. DESIGNERS WILL MAKE REVIEW COMMENTS ON THESE ELECTRONIC SUBMISSIONS AS NEEDED AND RETURN THEM TO THE FABRICATOR. UPON RECONCILIATION OF THE DESIGNER'S COMMENTS, FILES SHALL BE RETURNED TO THE DESIGNER. EACH SHEET WILL BE ELECTRONICALLY STAMPED BY THE DESIGNER.

THE CONTRACTOR SHOULD ALLOW FOR A MINIMUM OF TWO WEEKS FOR REVIEW OF PRESTRESSED BEAMS SHOP DRAWINGS IN ACCORDANCE WITH SPECIFICATION SECTION 105.02. STRUCTURAL STEEL REVIEW CYCLE DURATIONS WILL BE IN ACCORDANCE WITH SPECIFICATION SECTION 607.03.01.

WHEN ANY CHANGES IN THE DESIGN PLANS ARE PROPOSED BY THE FABRICATOR OR SUPPLIER, THE SHOP DRAWINGS REFLECTING THESE CHANGES SHALL BE SUBMITTED TO THE CONSULTANT THROUGH THE CONTRACTOR.

DISCLAIMER: ACCEPTANCE OF ANY CONTRACTOR'S SUBMISSION REQUIRED ON THIS PROJECT DOES NOT CONSTITUTE ENDORSEMENT OR APPROVAL. THE ACCEPTANCE IS ACKNOWLEDGEMENT OF THE WORK PERFORMED AND AUTHORIZATION OF THE CONTRACTOR TO PROCEED. THE DEPARTMENT IS NOT BOUND BY ACCEPTANCE OF ANY SUBMISSIONS REQUIRED. FINAL ACCEPTANCE OR APPROVAL WILL BE CONTINGENT ON THE SATISFACTORY COMPLETION OF THE PROJECT.

UTILITIES

THE CONTRACTOR SHALL BE RESPONSIBLE FOR LOCATING ANY AND ALL EXISTING UTILITIES PRIOR TO EXCAVATION OF MATERIAL OR INSTALLATION OF GUARDRAIL OR OTHER CONSTRUCTION ACTIVITIES THAT MAY INVOLVE UTILITIES (OVERHEAD OR UNDERGROUND).

BEFORE YOU DIG

THE CONTRACTOR SHALL BE RESPONSIBLE FOR ALL REQUIREMENTS AND CONFORMATION WITH THE UNDERGROUND FACILITY DAMAGE PREVENTION ACT OF 1994. THE CONTRACTOR WILL BE RESPONSIBLE FOR LOCATING ANY UTILITIES ON THIS PROJECT. ALL UNDERGROUND UTILITIES SHALL BE LOCATED PRIOR TO CONSTRUCTION. ANY UTILITIES DISTURBED OR DAMAGED AS A RESULT OF THE CONTRACTOR'S OPERATIONS WILL BE REPAIRED TO THE SATISFACTION OF THE UTILITY OWNER AT THE CONTRACTOR'S EXPENSE. THE CONTRACTOR IS ADVISED TO CALL (800) 752-6007 A MINIMUM OF TWO WORKING DAYS PRIOR TO EXCAVATION FOR INFORMATION ON THE LOCATION OF SOME BUT NOT NECESSARILY ALL UNDERGROUND UTILITIES.

DIMENSIONS

DIMENSIONS ARE FOR A NORMAL TEMPERATURE OF 60 DEGREES FAHRENHEIT. LAYOUT DIMENSIONS ARE HORIZONTAL DIMENSIONS.

ELASTOMERIC BEARING PADS

ELASTOMERIC BEARING PADS SHALL CONFORM TO THE AASHTO LRFD BRIDGE CONSTRUCTION SPECIFICATIONS.

BEARINGS SHALL BE LOW TEMPERATURE GRADE 3 WITH A DUROMETER HARDNESS OF 50 AND SHEAR MODULUS BETWEEN 95 psi AND 130 psi AND SHALL BE SUBJECTED TO THE LOAD TESTING REQUIREMENTS CORRESPONDING TO DESIGN METHOD B. THE COST OF BEARING PADS IS TO BE INCLUDED IN THE UNIT PRICE PER LINEAR FEET FOR PRECAST BEAMS.

SUPERSTRUCTURE SLAB

THE SUPERSTRUCTURE SLAB SHALL BE POURED CONTINUOUSLY FROM END TO END OF SLAB BEFORE THE CONCRETE IS ALLOWED TO SET.

STAY-IN-PLACE METAL FORMS

STAY-IN-PLACE METAL FORMS MAY BE USED ON BRIDGE DECKS. THE WELDING SHALL BE PERFORMED BY A CERTIFIED WELDER.

DESIGN INCLUDES 16 PSF FOR STAY IN PLACE FORM WEIGHT AND ALLOWS FOR CONCRETE FILLING THE VOIDS.

IF THE CONTRACTOR CHOOSES NOT TO FILL THE VALLEYS OF THE FORMS WITH STYROFOAM, ANY CONCRETE IN VALLEYS OF THE FORMS WILL BE CONSIDERED INCIDENTAL TO THE PLAN QUANTITY OF CLASS AA CONCRETE AND WILL NOT BE PAID.

STRUCTURE EXCAVATION

SHEETING, SHORING, DEWATERING OR COFFERDAMS MAY BE NECESSARY FOR CONSTRUCTION OF SUBSTRUCTURES. THE COST OF ANY OF THESE ITEMS SHALL BE INCLUDED IN THE UNIT PRICE BID FOR FOUNDATION PREPARATION.

GEOTECHNICAL

FOR ADDITIONAL NOTES AND GEOTECHNICAL INFORMATION SEE GEOTECHNICAL REPORT.
BY REFERENCE THE REPORT IS PART OF THE CONTRACT DOCUMENTS.

TEMPORARY SUPPORTS

TEMPORARY SUPPORTS OR SHORING WILL NOT BE PERMITTED UNDER THE BEAMS WHEN POURING THE CONCRETE BRIDGE DECK OR WHEN TAKING "TOP OF BEAM" ELEVATIONS.

CONSTRUCTION JOINTS

THE CONCRETE SURFACE AT ALL CONSTRUCTION JOINTS SHALL BE CLEANED AND PREPARED PER SECTION 601.03.10.B OF THE STANDARD SPECIFICATIONS.

STRUCTURE GRANULAR BACKFILL

MATERIALS FOR STRUCTURE GRANULAR BACKFILL SHALL BE IN ACCORDANCE WITH SECTION 805 OF THE SPECIFICATIONS. SEE SPECIAL PROVISION 69 FOR EMBANKMENT AT BRIDGE END BENT STRUCTURES.

MECHANICAL REINFORCEMENT COUPLERS

MECHANICAL COUPLERS ARE TO BE IN ACCORDANCE WITH SECTION 602 OF THE SPECIFICATIONS AND ARE TO PROVIDE A MECHANICAL TENSION SPLICE EQUIVALENT TO 125% OF THE SPECIFIED YIELD STRENGTH OF THE BAR BEING SPLICED. ANY ADJUSTMENT TO THE BAR LENGTHS REQUIRED FOR THE COUPLER TYPE BEING USED SHALL BE INCIDENTAL TO THE UNIT BID PRICE FOR MECHANICAL REINFORCEMENT COUPLERS.

COMPLETION OF THE STRUCTURE

THE CONTRACTOR IS REQUIRED TO COMPLETE THE STRUCTURE IN ACCORDANCE WITH THE PLANS AND SPECIFICATIONS. MATERIAL, LABOR, OR CONSTRUCTION OPERATIONS NOT OTHERWISE SPECIFIED, ARE TO BE INCLUDED IN THE BID ITEM MOST APPROPRIATE TO THE WORK INVOLVED AND OTHERWISE CONSIDERED INCIDENTAL TO THE CONTRACT. THIS MAY INCLUDE COFFERDAMS, SHORING, EXCAVATIONS, BACKFILLING, REMOVAL OF ALL OR PARTS OF EXISTING STRUCTURES, PHASE CONSTRUCTION, INCIDENTAL MATERIALS, LABOR, OR ANYTHING ELSE REQUIRED TO COMPLETE THE STRUCTURE.

TEMPORARY BRIDGE FLOORING

THE CONTRACTOR SHALL PROVIDE TEMPORARY BRIDGE FLOORING DURING THE CONSTRUCTION OF PORTIONS OF SPANS WHICH CROSS THE RAILROAD TRACKS. THE PURPOSE IS TO PROVIDE FALL PROTECTION TO WORKERS IN SITUATIONS WHERE THE DANGER FROM A FALL IS COMPOUNDED BY TRAFFIC BELOW AND TO PROVIDE PROTECTION TO THE TRAFFIC. TEMPORARY FLOORING SHALL BE INSTALLED AS SOON AS PRACTICABLE AFTER BEAMS ARE SET. THE TEMPORARY FLOORING SHALL EXTEND ACROSS THE TRACKS LOCATED BELOW SPAN 2.

THE DESIGN LOADS FOR TEMPORARY BRIDGE FLOORING SHALL CONSIST OF THE SUM OF DEAD LOAD AND VERTICAL LOADS. LIVE LOADS SHALL BE 50 PSF. FOR HORIZONTAL SURFACES PLUS THE WEIGHT OF ANY DISMANTLED MATERIAL WHICH IS ALLOWED TO FALL ON THE TEMPORARY FLOORING. THE DESIGN OF THE TEMPORARY FLOORING SHALL BE SUBMITTED WITH THE FALSEWORK DESIGN AND SHALL BE SUBJECT FOR REVIEW BY THE ENGINEER.

NO SEPERATE MEASUREMENT OF PAYMENT WILL BE MADE FOR PROVIDING AND SUBSEQUENTLY REMOVING TEMPORARY BRIDGE FLOORING AS THIS IS CONSIDERED INCIDENTAL TO THE CONTRACT.

THE REQUIREMENT FOR TEMPORARY BRIDGE FLOORING IS WAIVED WHEN STAY-IN-PLACE DECK FORMS ARE USED.

APPROACH EMBANKMENT CONSTRUCTION

INSTALLATION OF WICK DRAINS AND ASSOCIATED CONSTRUCTION SHALL BE ONE OF EARLIEST ACTIVITIES FOR THIS SITE TO ALLOW TIME FOR AS MUCH SETTLEMENT AS POSSIBLE TO OCCUR DURING CONSTRUCTION AND THUS REDUCING THE LONG-TERM IMPACTS OF THE SETTLEMENT.

EMBANKMENTS AT THE BRIDGE END BENT LOCATIONS SHALL BE CONSTRUCTED IN ACCORDANCE WITH SPECIAL PROVISION #69 FOR EMBANKMENTS AT BRIDGE END BENT STRUCTURES.

SETTLEMENT PLATFORMS SHALL BE FURNISHED AND INSTALLED BY THE CONTRACTOR IN ACCORDANCE WITH SECTION 216 OF THE CURRENT KENTUCKY DEPARTMENT OF HIGHWAYS STANDARD SPECIFICATIONS FOR ROAD AND BRIDGE CONSTRUCTION AND STANDARD DRAWING RGX-015. THE PLATFORMS SHALL BE OFFSET FROM THE LOCATED CENTERLINE SO AS TO BE IMMEDIATELY OUTSIDE OF THE GUARDRAIL OR AT THE EDGE OF THE SHOULDER AT THE FOLLOWING APPROXIMATE LOCATIONS:

APPROXIMATE STATION LIMITS

MAINLINE
126+40, LEFT SHOULDER
129+60, RIGHT SHOULDER

THE EXACT LOCATIONS SHALL BE DETERMINED BY THE ENGINEER AND A REPRESENTATIVE OF THE DIVISION OF STRUCTURAL DESIGN, GEOTECHNICAL BRANCH. SETTLEMENT READINGS SHALL BEGIN WITH AN INITIAL READING UPON PLACEMENT OF THE PLATFORM PRIOR TO BEGINNING EMBANKMENT CONSTRUCTION. READING SHALL CONTINUE PERIODICALLY DURING AND FOLLOWING COMPLETION OF THE SUBJECT EMBANKMENTS. THE SETTLEMENT PLATFORMS SHALL BE LEFT IN PLACE FOR FUTURE READINGS AFTER THE PROJECT IS COMPLETED. NECESSARY FORMS FOR RECORDING SETTLEMENT MEASUREMENTS CAN BE OBTAINED FROM THE GEOTECHNICAL BRANCH AT THE REQUEST OF THE ENGINEER. THE ENGINEER WILL BE RESPONSIBLE FOR READING AND RECORDING THE SETTLEMENT DATA. THE GEOTECHNICAL BRANCH WILL BE RESPONSIBLE FOR EVALUATION OF THE SETTLEMENT DATA. INSTALLATION OF THE FOUNDATION UNITS AT THE ABUTMENTS SHALL NOT BEGIN UNTIL THE GEOTECHNICAL BRANCH HAS DETERMINED THAT AN ADEQUATE PERCENT OF CONSOLIDATION OF THE FOUNDATION SOILS HAS BEEN ACHIEVED. THE CONTRACTOR SHALL BE RESPONSIBLE FOR REPLACING ALL DAMAGED SETTLEMENT PLATFORMS AT NO EXTRA COST.

PILE CORES SHALL BE CONSTRUCTED AT THE BRIDGE APPROACH EMBANKMENTS IN ACCORDANCE WITH KENTUCKY STANDARD DRAWINGS RGX-100 AND RGX-105, MEETING THE MATERIAL REQUIREMENTS OF THE CURRENT EDITION OF SPECIAL PROVISION 69. IT IS RECOMMENDED THAT THE PILE CORE AND THE ADJUSTMENT EMBANKMENT CONSIST OF SIMILAR MATERIAL TO PREVENT MIGRATION OF FINES INTO OR OUT OF THE PILE CORE, AND FUTURE SETTLEMENT OF THE EMBANKMENT. FOR EXAMPLE, PLACE SOIL EMBANKMENT AROUND A COHESIVE PILE CORE, AND ROCK OR GRANULAR EMBANKMENT AROUND A GRANULAR PILE CORE. IF DISSIMILAR MATERIAL ARE USED, A GEOTEXTILE FABRIC, AASHTO M 288 CLASS 1 OR 2, SEPARATOR WILL BE REQUIRED BETWEEN THE PILE CORE AND EMBANKMENT, IN ACCORDANCE WITH SECTIONS 214 AND 843 OF THE CURRENT STANDARD SPECIFICATIONS.

THE CONTRACTOR WILL INSTALL DRAINAGE BLANKET AND WICK DRAINS AND THEN CEASE WORK IN THE PROPOSED EMBANKMENT AREAS UNTIL SETTLEMENT REACHES TARGETS OUTLINED IN THE GEOTECHNICAL REPORT. NO EMBANKMENT WORK OR BRIDGE WORK CAN BEGIN UNTIL SETTLEMENT PERIOD HAS ENDED. AS OUTLINED IN THE GEOTECHNICAL REPORT IT MAY BE NECESSARY TO PRE-AUGER THE WICK DRAINS. REGARDLESS OF THE INSTALLATION METHOD, ALL PAYMENT FOR WICK DRAIN INSTALLATION SHALL BE UNDER THE "PREFABRICATED WICK DRAINS" BID ITEM.

REVISED 11-25-25

SPECIFICATIONS

ALL REFERENCES TO THE STANDARD SPECIFICATIONS ARE TO THE 2019 EDITION OF THE KENTUCKY DEPARTMENT OF HIGHWAYS STANDARD SPECIFICATIONS FOR ROAD AND BRIDGE CONSTRUCTION WITH CURRENT SUPPLEMENTAL SPECIFICATIONS.

ALL REFERENCES TO THE AASHTO SPECIFICATIONS ARE TO THE LRFD BRIDGE DESIGN SPECIFICATIONS, 9th EDITION.

DESIGN LOAD

THIS BRIDGE IS DESIGNED FOR KYHL-93 (HL-93 INCREASED BY 25%).
THIS BRIDGE IS DESIGNED FOR A FUTURE WEARING SURFACE OF 15 PSF.
THIS BRIDGE IS DESIGNED FOR A WIND LOAD BASED ON A WIND VELOCITY OF 100 MPH.

DESIGN METHOD

ALL REINFORCED CONCRETE MEMBERS ARE DESIGNED BY THE LOAD AND RESISTANCE FACTOR METHOD AS SPECIFIED IN THE CURRENT AASHTO SPECIFICATIONS.

MATERIALS DESIGN SPECIFICATIONS

FOR CLASS "A" REINFORCED CONCRETE	F'C = 3500 psi
FOR CLASS "AA" REINFORCED CONCRETE	F'C = 4000 psi
FOR STEEL REINFORCEMENT	FY = 60000 psi
FOR PRESTRESSED GIRDER CONCRETE	F'C = 8000 psi
FOR PRESTRESSING STRANDS	F'S = 270000 psi
FOR STEEL PILING	FY = 50000 psi

PREFORMED SPONGE RUBBER EXPANSION JOINT MATERIAL

PREFORMED SPONGE RUBBER EXPANSION JOINT MATERIAL SHALL CONFORM TO SUBSECTION 807.04.02 (TYPE 1) OF THE KENTUCKY DEPARTMENT OF HIGHWAYS STANDARD SPECIFICATIONS. COST OF PREFORMED SPONGE RUBBER IS TO BE INCLUDED IN THE UNIT BID PRICE FOR PRESTRESSED BEAMS.

CONCRETE

CLASS "AA" CONCRETE IS TO BE USED THROUGHOUT THE SUPERSTRUCTURE AND IN THE PORTIONS OF THE SUBSTRUCTURE ABOVE THE TOPS OF CAPS. CLASS "A" CONCRETE IS TO BE USED IN THE SUBSTRUCTURE BELOW THE TOP OF CAPS. PRESTRESSED BEAM CONCRETE SHALL BE IN ACCORDANCE WITH THE PLANS AND SPECIFICATIONS.

REINFORCEMENT

DIMENSIONS SHOWN FROM THE FACE OF CONCRETE TO BARS ARE TO CENTER OF BAR UNLESS OTHERWISE SHOWN. SPACING OF BARS IS FROM CENTER TO CENTER OF BARS. ANY REINFORCING BARS DESIGNATED BY SUFFIX "e" IN THE PLANS SHALL BE EPOXY COATED IN ACCORDANCE WITH SECTION 811.10 OF THE STANDARD SPECIFICATIONS. ANY REINFORCING BARS DESIGNATED BY SUFFIX "s" IN A BILL OF REINFORCEMENT SHALL BE CONSIDERED A STIRRUP FOR PURPOSES OF BEND DIAMETERS.

CONSTRUCTION IDENTIFICATION

APPLY STENCILS FOR STRUCTURES IN ACCORDANCE WITH STANDARD DRAWING BGX-006, C.E. THE CONTRACTOR SHALL FURNISH ALL PLANS, EQUIPMENT, AND LABOR NECESSARY TO DO THE WORK FOR WHICH NO DIRECT PAYMENT WILL BE MADE.

BEVELED EDGES

ALL EXPOSED EDGES SHALL BE BEVELED ¾" UNLESS OTHERWISE SHOWN.

SLOPE PROTECTION

SLOPE PROTECTION SHALL BE CRUSHED AGGREGATE SLOPE PROTECTION IN ACCORDANCE WITH THE PLANS AND SPECIFICATIONS. GEOTEXTILE FABRIC, CLASS 1 SHALL BE PLACED BETWEEN THE EMBANKMENT AND THE SLOPE PROTECTION IN ACCORDANCE WITH STANDARD SPECIFICATIONS 214 AND 843. PAYMENT FOR GEOTEXTILE FABRIC, CLASS 1, SHALL BE CONSIDERED INCIDENTAL TO THE UNIT PRICE BID FOR CRUSHED AGGREGATE SLOPE PROTECTION.

CONCRETE SEALING

CONTRARY TO THE SPECIFICATIONS, DO NOT APPLY MASONRY COATING. INSTEAD APPLY CONCRETE SEALING IN ACCORDANCE WITH THE SPECIAL NOTE FOR CONCRETE SEALING.

SEISMIC DESIGN

THIS BRIDGE HAS BEEN DESIGNED FOR SEISMIC ZONE 3 CRITERIA FROM AASHTO LRFD.

FOUNDATION DATA

SEE FOUNDATION LAYOUT AND PILE RECORD.

PILING

SEE DRIVING CRITERIA NOTE ON THE PILE RECORD SHEET.

TEST PILES SHALL BE DRIVEN WHERE DESIGNATED ON THE PLANS TO DETERMINE THE LENGTH OF PILE REQUIRED.

ALL TEST PILES SHALL BE ACCURATELY LOCATED SO THAT THEY MAY BE USED IN THE FINISHED STRUCTURE.

SHOP DRAWINGS

FABRICATORS SHALL SUBMIT ALL REQUIRED SHOP PLANS, BY EMAIL, TO THE DESIGN CONSULTANT FOR REVIEW. THESE SUBMISSIONS SHALL DEPICT THE SHOP PLANS, IN .PDF FORMAT, AS EITHER 11"x17" OR 22"x36" SHEETS. DESIGNERS WILL MAKE REVIEW COMMENTS ON THESE ELECTRONIC SUBMISSIONS AS NEEDED AND RETURN THEM TO THE FABRICATOR. UPON RECONCILIATION OF THE DESIGNER'S COMMENTS, FILES SHALL BE RETURNED TO THE DESIGNER. EACH SHEET WILL BE ELECTRONICALLY STAMPED BY THE DESIGNER.

THE CONTRACTOR SHOULD ALLOW FOR A MINIMUM OF TWO WEEKS FOR REVIEW OF PRESTRESSED BEAMS SHOP DRAWINGS IN ACCORDANCE WITH SPECIFICATION SECTION 105.02. STRUCTURAL STEEL REVIEW CYCLE DURATIONS WILL BE IN ACCORDANCE WITH SPECIFICATION SECTION 607.03.01.

WHEN ANY CHANGES IN THE DESIGN PLANS ARE PROPOSED BY THE FABRICATOR OR SUPPLIER, THE SHOP DRAWINGS REFLECTING THESE CHANGES SHALL BE SUBMITTED TO THE CONSULTANT THROUGH THE CONTRACTOR.

DISCLAIMER: ACCEPTANCE OF ANY CONTRACTOR'S SUBMISSION REQUIRED ON THIS PROJECT DOES NOT CONSTITUTE ENDORSEMENT OR APPROVAL. THE ACCEPTANCE IS ACKNOWLEDGEMENT OF THE WORK PERFORMED AND AUTHORIZATION OF THE CONTRACTOR TO PROCEED. THE DEPARTMENT IS NOT BOUND BY ACCEPTANCE OF ANY SUBMISSIONS REQUIRED. FINAL ACCEPTANCE OR APPROVAL WILL BE CONTINGENT ON THE SATISFACTORY COMPLETION OF THE PROJECT.

UTILITIES

THE CONTRACTOR SHALL BE RESPONSIBLE FOR LOCATING ANY AND ALL EXISTING UTILITIES PRIOR TO EXCAVATION OF MATERIAL OR INSTALLATION OF GUARDRAIL OR OTHER CONSTRUCTION ACTIVITIES THAT MAY INVOLVE UTILITIES (OVERHEAD OR UNDERGROUND).

BEFORE YOU DIG

THE CONTRACTOR SHALL BE RESPONSIBLE FOR ALL REQUIREMENTS AND CONFORMATION WITH THE UNDERGROUND FACILITY DAMAGE PREVENTION ACT OF 1994. THE CONTRACTOR WILL BE RESPONSIBLE FOR LOCATING ANY UTILITIES ON THIS PROJECT. ALL UNDERGROUND UTILITIES SHALL BE LOCATED PRIOR TO CONSTRUCTION. ANY UTILITIES DISTURBED OR DAMAGED AS A RESULT OF THE CONTRACTOR'S OPERATIONS WILL BE REPAIRED TO THE SATISFACTION OF THE UTILITY OWNER AT THE CONTRACTOR'S EXPENSE. THE CONTRACTOR IS ADVISED TO CALL (800) 752-6007 A MINIMUM OF TWO WORKING DAYS PRIOR TO EXCAVATION FOR INFORMATION ON THE LOCATION OF SOME BUT NOT NECESSARILY ALL UNDERGROUND UTILITIES.

DIMENSIONS

DIMENSIONS ARE FOR A NORMAL TEMPERATURE OF 60 DEGREES FAHRENHEIT. LAYOUT DIMENSIONS ARE HORIZONTAL DIMENSIONS.

ELASTOMERIC BEARING PADS

ELASTOMERIC BEARING PADS SHALL CONFORM TO THE AASHTO LRFD BRIDGE CONSTRUCTION SPECIFICATIONS.

BEARINGS SHALL BE LOW TEMPERATURE GRADE 3 WITH A DUROMETER HARDNESS OF 50 AND SHEAR MODULUS BETWEEN 95 psi AND 130 psi AND SHALL BE SUBJECTED TO THE LOAD TESTING REQUIREMENTS CORRESPONDING TO DESIGN METHOD B. THE COST OF BEARING PADS IS TO BE INCLUDED IN THE UNIT PRICE PER LINEAR FEET FOR PRECAST BEAMS.

SUPERSTRUCTURE SLAB

THE SUPERSTRUCTURE SLAB SHALL BE POURED CONTINUOUSLY FROM END TO END OF SLAB BEFORE THE CONCRETE IS ALLOWED TO SET.

STAY-IN-PLACE METAL FORMS

STAY-IN-PLACE METAL FORMS MAY BE USED ON BRIDGE DECKS. THE WELDING SHALL BE PERFORMED BY A CERTIFIED WELDER.

DESIGN INCLUDES 16 PSF FOR STAY IN PLACE FORM WEIGHT AND ALLOWS FOR CONCRETE FILLING THE VOIDS.

IF THE CONTRACTOR CHOOSES NOT TO FILL THE VALLEYS OF THE FORMS WITH STYROFOAM, ANY CONCRETE IN VALLEYS OF THE FORMS WILL BE CONSIDERED INCIDENTAL TO THE PLAN QUANTITY OF CLASS AA CONCRETE AND WILL NOT BE PAID.

STRUCTURE EXCAVATION

SHEETING, SHORING, DEWATERING OR COFFERDAMS MAY BE NECESSARY FOR CONSTRUCTION OF SUBSTRUCTURES. THE COST OF ANY OF THESE ITEMS SHALL BE INCLUDED IN THE UNIT PRICE BID FOR FOUNDATION PREPARATION.

GEOTECHNICAL

FOR ADDITIONAL NOTES AND GEOTECHNICAL INFORMATION SEE GEOTECHNICAL REPORT.
BY REFERENCE THE REPORT IS PART OF THE CONTRACT DOCUMENTS.

TEMPORARY SUPPORTS

TEMPORARY SUPPORTS OR SHORING WILL NOT BE PERMITTED UNDER THE BEAMS WHEN POURING THE CONCRETE BRIDGE DECK OR WHEN TAKING "TOP OF BEAM" ELEVATIONS.

CONSTRUCTION JOINTS

THE CONCRETE SURFACE AT ALL CONSTRUCTION JOINTS SHALL BE CLEANED AND PREPARED PER SECTION 601.03.10.B OF THE STANDARD SPECIFICATIONS.

STRUCTURE GRANULAR BACKFILL

MATERIALS FOR STRUCTURE GRANULAR BACKFILL SHALL BE IN ACCORDANCE WITH SECTION 805 OF THE SPECIFICATIONS. SEE SPECIAL PROVISION 69 FOR EMBANKMENT AT BRIDGE END BENT STRUCTURES.

MECHANICAL REINFORCEMENT COUPLERS

MECHANICAL COUPLERS ARE TO BE IN ACCORDANCE WITH SECTION 602 OF THE SPECIFICATIONS AND ARE TO PROVIDE A MECHANICAL TENSION SPLICE EQUIVALENT TO 125% OF THE SPECIFIED YIELD STRENGTH OF THE BAR BEING SPLICED. ANY ADJUSTMENT TO THE BAR LENGTHS REQUIRED FOR THE COUPLER TYPE BEING USED SHALL BE INCIDENTAL TO THE UNIT BID PRICE FOR MECHANICAL REINFORCEMENT COUPLERS.

COMPLETION OF THE STRUCTURE

THE CONTRACTOR IS REQUIRED TO COMPLETE THE STRUCTURE IN ACCORDANCE WITH THE PLANS AND SPECIFICATIONS. MATERIAL, LABOR, OR CONSTRUCTION OPERATIONS NOT OTHERWISE SPECIFIED, ARE TO BE INCLUDED IN THE BID ITEM MOST APPROPRIATE TO THE WORK INVOLVED AND OTHERWISE CONSIDERED INCIDENTAL TO THE CONTRACT. THIS MAY INCLUDE COFFERDAMS, SHORING, EXCAVATIONS, BACKFILLING, REMOVAL OF ALL OR PARTS OF EXISTING STRUCTURES, PHASE CONSTRUCTION, INCIDENTAL MATERIALS, LABOR, OR ANYTHING ELSE REQUIRED TO COMPLETE THE STRUCTURE.

TEMPORARY BRIDGE FLOORING

THE CONTRACTOR SHALL PROVIDE TEMPORARY BRIDGE FLOORING DURING THE CONSTRUCTION OF PORTIONS OF SPANS WHICH CROSS THE RAILROAD TRACKS. THE PURPOSE IS TO PROVIDE FALL PROTECTION TO WORKERS IN SITUATIONS WHERE THE DANGER FROM A FALL IS COMPOUNDED BY TRAFFIC BELOW AND TO PROVIDE PROTECTION TO THE TRAFFIC. TEMPORARY FLOORING SHALL BE INSTALLED AS SOON AS PRACTICABLE AFTER BEAMS ARE SET. THE TEMPORARY FLOORING SHALL EXTEND ACROSS THE TRACKS LOCATED BELOW SPAN 2.

THE DESIGN LOADS FOR TEMPORARY BRIDGE FLOORING SHALL CONSIST OF THE SUM OF DEAD LOAD AND VERTICAL LOADS. LIVE LOADS SHALL BE 50 PSF. FOR HORIZONTAL SURFACES PLUS THE WEIGHT OF ANY DISMANTLED MATERIAL WHICH IS ALLOWED TO FALL ON THE TEMPORARY FLOORING. THE DESIGN OF THE TEMPORARY FLOORING SHALL BE SUBMITTED WITH THE FALSEWORK DESIGN AND SHALL BE SUBJECT FOR REVIEW BY THE ENGINEER.

NO SEPERATE MEASUREMENT OF PAYMENT WILL BE MADE FOR PROVIDING AND SUBSEQUENTLY REMOVING TEMPORARY BRIDGE FLOORING AS THIS IS CONSIDERED INCIDENTAL TO THE CONTRACT.

THE REQUIREMENT FOR TEMPORARY BRIDGE FLOORING IS WAIVED WHEN STAY-IN-PLACE DECK FORMS ARE USED.

APPROACH EMBANKMENT CONSTRUCTION

INSTALLATION OF WICK DRAINS AND ASSOCIATED CONSTRUCTION SHALL BE ONE OF EARLIEST ACTIVITIES FOR THIS SITE TO ALLOW TIME FOR AS MUCH SETTLEMENT AS POSSIBLE TO OCCUR DURING CONSTRUCTION AND THUS REDUCING THE LONG-TERM IMPACTS OF THE SETTLEMENT.

EMBANKMENTS AT THE BRIDGE END BENT LOCATIONS SHALL BE CONSTRUCTED IN ACCORDANCE WITH SPECIAL PROVISION #69 FOR EMBANKMENTS AT BRIDGE END BENT STRUCTURES.

SETTLEMENT PLATFORMS SHALL BE FURNISHED AND INSTALLED BY THE CONTRACTOR IN ACCORDANCE WITH SECTION 216 OF THE CURRENT KENTUCKY DEPARTMENT OF HIGHWAYS STANDARD SPECIFICATIONS FOR ROAD AND BRIDGE CONSTRUCTION AND STANDARD DRAWING RGX-015. THE PLATFORMS SHALL BE OFFSET FROM THE LOCATED CENTERLINE SO AS TO BE IMMEDIATELY OUTSIDE OF THE GUARDRAIL OR AT THE EDGE OF THE SHOULDER AT THE FOLLOWING APPROXIMATE LOCATIONS:

APPROXIMATE STATION LIMITS

MAINLINE
126+40, LEFT SHOULDER
129+60, RIGHT SHOULDER

THE EXACT LOCATIONS SHALL BE DETERMINED BY THE ENGINEER AND A REPRESENTATIVE OF THE DIVISION OF STRUCTURAL DESIGN, GEOTECHNICAL BRANCH. SETTLEMENT READINGS SHALL BEGIN WITH AN INITIAL READING UPON PLACEMENT OF THE PLATFORM PRIOR TO BEGINNING EMBANKMENT CONSTRUCTION. READING SHALL CONTINUE PERIODICALLY DURING AND FOLLOWING COMPLETION OF THE SUBJECT EMBANKMENTS. THE SETTLEMENT PLATFORMS SHALL BE LEFT IN PLACE FOR FUTURE READINGS AFTER THE PROJECT IS COMPLETED. NECESSARY FORMS FOR RECORDING SETTLEMENT MEASUREMENTS CAN BE OBTAINED FROM THE GEOTECHNICAL BRANCH AT THE REQUEST OF THE ENGINEER. THE ENGINEER WILL BE RESPONSIBLE FOR READING AND RECORDING THE SETTLEMENT DATA. THE GEOTECHNICAL BRANCH WILL BE RESPONSIBLE FOR EVALUATION OF THE SETTLEMENT DATA. INSTALLATION OF THE FOUNDATION UNITS AT THE ABUTMENTS SHALL NOT BEGIN UNTIL THE GEOTECHNICAL BRANCH HAS DETERMINED THAT AN ADEQUATE PERCENT OF CONSOLIDATION OF THE FOUNDATION SOILS HAS BEEN ACHIEVED. THE CONTRACTOR SHALL BE RESPONSIBLE FOR REPLACING ALL DAMAGED SETTLEMENT PLATFORMS AT NO EXTRA COST.

PILE CORES SHALL BE CONSTRUCTED AT THE BRIDGE APPROACH EMBANKMENTS IN ACCORDANCE WITH KENTUCKY STANDARD DRAWINGS RGX-100 AND RGX-105, MEETING THE MATERIAL REQUIREMENTS OF THE CURRENT EDITION OF SPECIAL PROVISION 69. IT IS RECOMMENDED THAT THE PILE CORE AND THE ADJUSTMENT EMBANKMENT CONSIST OF SIMILAR MATERIAL TO PREVENT MIGRATION OF FINES INTO OR OUT OF THE PILE CORE, AND FUTURE SETTLEMENT OF THE EMBANKMENT. FOR EXAMPLE, PLACE SOIL EMBANKMENT AROUND A COHESIVE PILE CORE, AND ROCK OR GRANULAR EMBANKMENT AROUND A GRANULAR PILE CORE. IF DISSIMILAR MATERIAL ARE USED, A GEOTEXTILE FABRIC, AASHTO M 288 CLASS 1 OR 2, SEPARATOR WILL BE REQUIRED BETWEEN THE PILE CORE AND EMBANKMENT, IN ACCORDANCE WITH SECTIONS 214 AND 843 OF THE CURRENT STANDARD SPECIFICATIONS.

THE CONTRACTOR WILL INSTALL DRAINAGE BLANKET AND WICK DRAINS AND THEN CEASE WORK IN THE PROPOSED EMBANKMENT AREAS UNTIL SETTLEMENT REACHES TARGETS OUTLINED IN THE GEOTECHNICAL REPORT. NO EMBANKMENT WORK OR BRIDGE WORK CAN BEGIN UNTIL SETTLEMENT PERIOD HAS ENDED. AS OUTLINED IN THE GEOTECHNICAL REPORT IT MAY BE NECESSARY TO PRE-AUGER THE WICK DRAINS. REGARDLESS OF THE INSTALLATION METHOD, ALL PAYMENT FOR WICK DRAIN INSTALLATION SHALL BE UNDER THE "PREFABRICATED WICK DRAINS" BID ITEM.